REVIEWER NOTES

1) THE TOWN OF NEWFANE HAS VOTED TO REPLACE THE EXISTING CONCRETE ARCH WITH A WIDER 28-FOOT ARCH. THE BRIDGE WILL BE STRIPED FOR (1) 12-FT TRAVEL LANE AND (2) 7-FT PEDESTRIAN / BICYCLE LANES. THIS WILL ALLOW THE TOWN TO MAINTAIN ITS PREFERENCE OF ONE-WAY TRAFFIC ACROSS THE BRIDGE BUT ALSO ACCOMODATE TWO LANES OF TRAFFIC IN THE FUTURE OR DURING EMERGENCY SITUATIONS. ONE-WAY TRAFFIC WILL BE CONTROLLED VIA A COMBINATION OF STOP AND YIELD SIGNS.

2) THE BRIDGE WILL BE CLOSED DURING CONSTRUCITON. TRAFFIC ALONG TH 2 (DOVER ROAD) AND TH 5 (GRIMES HILL ROAD) WILL BE MAINTAINED VIA ONE WAY, ALTERNATING TRAFFIC CONTROLLED BY A TEMPORARY TRAFFIC SIGNAL SYSTEM AND THE USE OF DRIVEWAY ASSISTANCE DEVICES. THE TOWN OF NEWFANE WILL BE RESPONSIBLE FOR SIGNING THE DETOUR.

3) NOTE THAT DEPOT ROAD AND DOVER ROAD ARE BOTH TH 2.

STATE OF VERMONT
AGENCY OF TRANSPORTATION

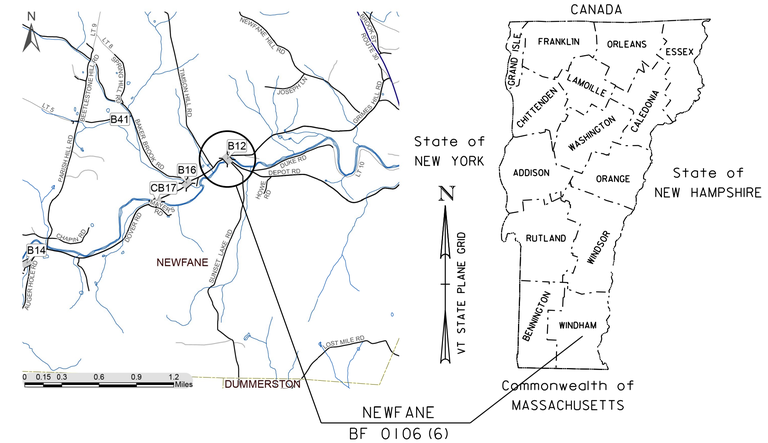

PROPOSED IMPROVEMENT
BRIDGE PROJECT

TOWN OF NEWFANE
COUNTY OF WINDHAM

ROUTE NO : FAS ROUTE 106 (TH 2 / DEPOT ROAD) , MAJOR COLLECTOR (CLASS 2) , BRIDGE NO : 12

PROJECT LOCATION: ON TH 2 (DEPOT ROAD) BEGINNING APPROXIMATELY 1.9 MILES WESTERLY OF THE INTERSECTION OF TH 2 & VT 30 AND EXTENDING EASTERLY APPROXIMATELY .045 MILES.

PROJECT DESCRIPTION: REMOVAL OF EXISTING CONCRETE ARCH BRIDGE AND REPLACEMENT WITH A NEW CONCRETE ARCH BRIDGE AND RELATED ROADWAY AND CHANNEL WORK.

LENGTH OF STRUCTURE: 115.76 FEET
LENGTH OF ROADWAY: 59.24 FEET
LENGTH OF PROJECT: 175.00 FEET

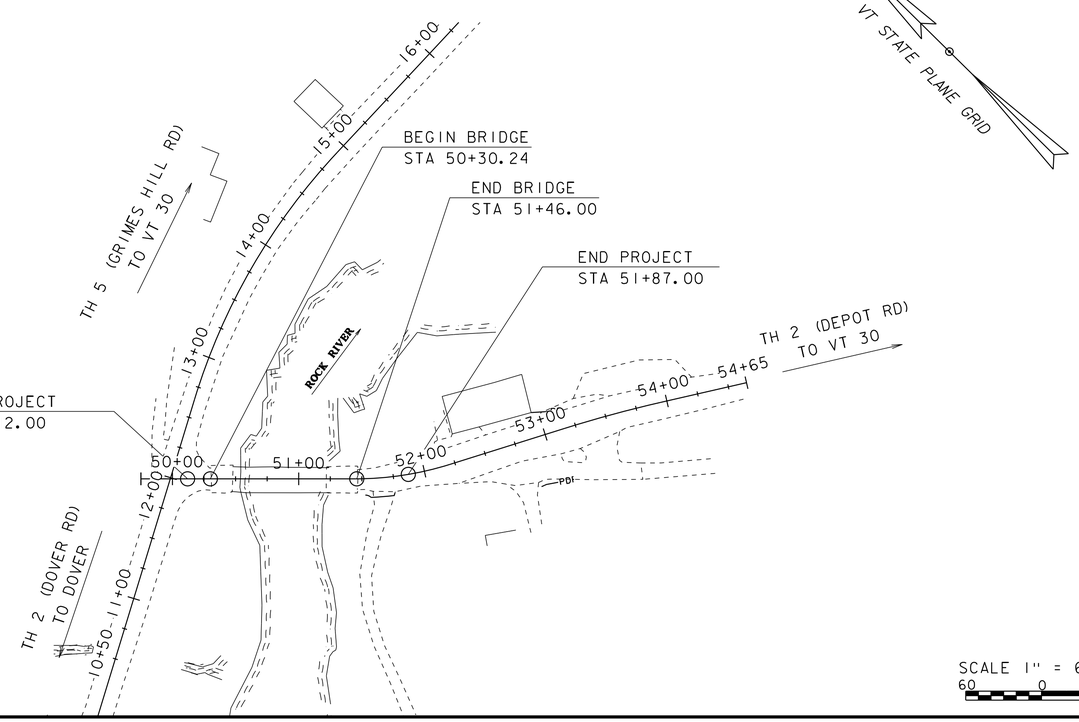

SCALE 1" = 60'-0"
60 0 60

FINAL PLANS
08-SEP-2020

CONSTRUCTION IS TO BE CARRIED ON IN ACCORDANCE WITH THESE PLANS AND THE STANDARD SPECIFICATIONS FOR CONSTRUCTION DATED 2018, AS APPROVED BY THE FEDERAL HIGHWAY ADMINISTRATION ON APRIL 13, 2018 FOR USE ON THIS PROJECT, INCLUDING ALL SUBSEQUENT REVISIONS AND SUCH REVISED SPECIFICATIONS AND SPECIAL PROVISIONS AS ARE INCORPORATED IN THESE PLANS.

QUALITY ASSURANCE PROGRAM : LEVEL 2	
SURVEYED BY :	R. GILMAN
SURVEYED DATE :	04-22-2013
DATUM	
VERTICAL	NAVD88
HORIZONTAL	NAD83 (2011)

HIGHWAY DIVISION, CHIEF ENGINEER
APPROVED _____ DATE _____

PROJECT MANAGER : CAROLYN W. COTA, P.E.

PROJECT NAME : NEWFANE
PROJECT NUMBER : BF 0106 (6)

SHEET 1 OF 64 SHEETS

STATE OF VERMONT
AGENCY OF TRANSPORTATION

PRELIMINARY INFORMATION SHEET (BRIDGE)

Version
LRFD

INDEX OF SHEETS

PLAN SHEETS

1	TITLE SHEET
2	PRELIMINARY INFORMATION SHEET
3 - 5	TYPICAL SECTIONS 1-3
6 - 7	PROJECT NOTES SHEET 1-2
8 - 9	QUANTITY SHEET 1-2
10	BRIDGE QUANTITY SHEET
11	CONVENTIONAL SYMBOLOGY LEGEND
12	TIE SHEET
13 - 14	EXISTING CONDITIONS 1-2
15 - 16	LAYOUT 1-2
17	DEPOT RD PROFILE & BANKING DIAGRAM
18	DOVER RD / GRIMES HILL RD PROFILE & BANKING
19	TEMPORARY TRAFFIC CONTROL PLAN
20	UTILITY LAYOUT
21	SIGNS & PAVEMENT MARKINGS
22	TRAFFIC SIGN SUMMARY
23	BORING INFORMATION SHEET
24 - 25	BORING LOGS 1-2
26	PLAN AND ELEVATION
27	ARCH ELEVATION & DETAILS
28 - 29	ABUTMENT 1 DETAIL SHEET 1-2
30	ABUTMENT 2 DETAIL SHEET
31	WINGWALL 1 DETAILS
32	WINGWALL 2 DETAILS
33 - 34	BRIDGE RAIL DETAILS 1-2
35 - 38	DEPOT RD (TH 2) CROSS SECTIONS 1-4
39 - 43	DOVER (TH 2) / GRIMES HILL (TH 5) CROSS SECTIONS 1-5
44	DROP INLET #3 AND PIPE #3 PROFILE
45	MATERIAL TRANSITION DETAILS
46 - 53	CHANNEL CROSS SECTIONS 1-8
54	EPSC DETAILS
55 - 64	RECORD PLANS 1-10

STANDARDS LIST

A-62	SLOPES IN SOLID ROCK EXCAV. (DHV OVER 100 VPH)	06-30-1995
B-5	SLOPE GRADING, EMBANKMENTS, MUCK	06-01-1994
B-71	STANDARD FOR RESIDENTIAL AND COMMERCIAL DRIVES	07-08-2005
D-1	PRECAST REINFORCED CONCRETE DROP INLET DETAILS	06-01-1994
E-10	ROLLED EROSION CONTROL PRODUCT, TYPE I	07-01-2019
E-11	CHECK DAM, TYPE I	07-01-2019
E-12	STABILIZED CONSTRUCTION ENTRANCE	07-01-2019
E-15	SILT FENCE	07-01-2019
E-121	STANDARD SIGN PLACEMENT - CONVENTIONAL ROAD	08-08-1995
E-127	ROUTE MARKINGS AT RURAL INTERSECTIONS	08-08-1995
E-146	REGULATORY SIGN DETAILS	09-20-1995
E-192	PAVEMENT MARKING DETAILS	10-12-2000
E-193	PAVEMENT MARKING DETAILS	08-18-1995
G-1	STEEL BEAM GUARDRAIL DETAILS (POST, DELINEATOR, TYPICALS)	03-10-2017
G-1D	STEEL BEAM GUARDRAIL DETAILS (END TERMINAL ANCHOR, MEDIAN)	03-10-2017
J-3	MAIL BOX SUPPORT DETAILS	08-07-1995
S-352A	BRIDGE RAILING, GALVANIZED STEEL TUBING/CONCRETE COMBINATION	08-22-2012
S-352B	BRIDGE RAILING, GALVANIZED STEEL TUBING/CONCRETE COMBINATION	08-22-2012
S-352C	BRIDGE RAILING, GALVANIZED STEEL TUBING/CONCRETE COMBINATION	08-22-2012
S-352D	GUARDRAIL APPROACH SECTION TO CONCRETE COMBINATION BRIDGE RAILING, T	02-02-2017
T-1	TRAFFIC CONTROL GENERAL NOTES	04-25-2016
T-2	TRAFFIC SIGN GENERAL NOTES	04-25-2016
T-10	CONVENTIONAL ROADS CONSTRUCTION APPROACH SIGNING	08-06-2012
T-28	CONSTRUCTION SIGN DETAILS	08-06-2012
T-29	CONSTRUCTION SIGN DETAILS	08-06-2012
T-30	CONSTRUCTION SIGN DETAILS	08-06-2012
T-31	CONSTRUCTION SIGN DETAILS	08-06-2012
T-33	MISCELLANEOUS SIGN DETAILS	08-06-2012
T-40	DELINEATORS AND MILEPOSTS	01-02-2013
T-42	BRIDGE NUMBER PLAQUE	04-09-2014
T-45	SQUARE TUBE SIGN POST AND ANCHOR	01-02-2013
T-56	STANDARD SIGN PLACEMENT	10-26-2015
T-81	VERMONT WARNING SIGN DETAILS	02-12-2016
T-93	DESTINATION SIGN DETAILS	10-26-2015
T-95	VILLAGE SIGNS	05-25-2016

STRUCTURES & HSD DETAIL SHEETS

HSD-400.01	SAFETY EDGE DETAILS	1/5/2018
HSD-621.06	GUARDRAIL TERMINAL LABEL DETAIL	11/3/2016
SD-352.00	GUARDRAIL APP. SECTION TO CONC. COMBO BRIDGE RAILING, TL-3	2/12/2015
SD-501.00	CONCRETE DETAILS AND NOTES	5/7/2010
SD-502.00	CONCRETE DETAILS AND NOTES	5/7/2010

FINAL HYDRAULIC REPORT

HYDROLOGIC DATA

Date: October 2016

DRAINAGE AREA : 54.0 sq. mi.
CHARACTER OF TERRAIN : Mostly wooded, rurual
STREAM CHARACTERISTICS : Sinuous and alluvial
NATURE OF STREAMBED : Ledge, boulders, cobbles, gravel

PEAK FLOW DATA - ANNUAL EXCEEDANCE PROBABILITY (AEP)

43% =	2,000 cfs	2% =	7,100 cfs
10% =	4,600 cfs	1% =	8,200 cfs
4% =	6,000 cfs	0.2% =	11,500 cfs

DATE OF FLOOD OF RECORD: Unknown
ESTIMATED DISCHARGE: Unknown
WATER SURFACE ELEV.: Unknown
NATURAL STREAM VELOCITY : @ 2% AEP = 15.7 fps
ICE CONDITIONS : Moderate
DEBRIS: Light
DOES THE STREAM REACH MAXIMUM HIGHWATER ELEV. RAPIDLY? No
IS ORDINARY RISE RAPID? No
IS STAGE AFFECTED BY UPSTREAM OR DOWNSTREAM CONDITIONS? No
IF YES, DESCRIBE:

WATERSHED STORAGE: <2%
HEADWATERS:
UNIFORM: X
IMMEDIATELY ABOVE SITE:

EXISTING STRUCTURE INFORMATION

STRUCTURE TYPE: Concrete arch
YEAR BUILT: 1900
CLEAR SPAN(NORMAL TO STREAM): 76'
VERTICAL CLEARANCE ABOVE STREAMBED: 32'
WATERWAY OF FULL OPENING: 1970 sq. ft.
DISPOSITION OF STRUCTURE: Remove and replace
TYPE OF MATERIAL UNDER SUBSTRUCTURE: See borings

WATER SURFACE ELEVATIONS AT:

43% AEP =	491.3'	VELOCITY =	9.0 fps
10% AEP =	494.1'	"	11.4 fps
4% AEP =	495.5'	"	11.9 fps
2% AEP =	496.5'	"	12.1 fps
1% AEP =	497.5'	"	12.3 fps

LONG TERM STREAMBED CHANGES: None noted

IS THE ROADWAY OVERTOPPED BELOW 1% AEP: No
FREQUENCY: N/A
RELIEF ELEVATION: 520.7'
DISCHARGE OVER ROAD @ 1% AEP: N/A

UPSTREAM STRUCTURE

TOWN: Newfane
DISTANCE: 4140'
HIGHWAY # : TH 2
STRUCTURE #: CB17
CLEAR SPAN: 120'
CLEAR HEIGHT:
YEAR BUILT: 1870, reconstructed 2010
FULL WATERWAY:
STRUCTURE TYPE: Covered bridge

DOWNSTREAM STRUCTURE

TOWN: Newfane
DISTANCE: 12,480'
HIGHWAY # : VT 30
STRUCTURE #: 9
CLEAR SPAN:
CLEAR HEIGHT:
YEAR BUILT:
FULL WATERWAY:
STRUCTURE TYPE:

LRFR LOAD RATING FACTORS *

LOADING LEVELS	TRUCK						
	H-20	HL-93	3S2	6 AXLE	3A. STR.	4A. STR.	5A. SEMI
TONNAGE	20	36	36	66	30	34.5	38
INVENTORY							
POSTING							
OPERATING							
COMMENTS:	* PRECAST FABRICATOR TO PROVIDE DESIGN VALUES						

PROPOSED STRUCTURE

STRUCTURE TYPE: Concrete arch

CLEAR SPAN(NORMAL TO STREAM): 76'
VERTICAL CLEARANCE ABOVE STREAMBED: 32'
WATERWAY OF FULL OPENING: 1970 sq. ft.

WATER SURFACE ELEVATIONS AT:

43% AEP =	491.3'	VELOCITY=	9.0 fps
10% AEP =	494.1'	"	11.4 fps
4% AEP =	495.5'	"	11.9 fps
2% AEP =	496.5'	"	12.1 fps
1% AEP =	497.5'	"	12.3 fps

IS THE ROADWAY OVERTOPPED BELOW 1% AEP: No
FREQUENCY: N/A
RELIEF ELEVATION: 520.7'
DISCHARGE OVER ROAD @ 1% AEP: N/A

BRIDGE LOW CHORD ELEVATION: 517.1'
FREEBOARD: @ 2% AEP = 20.6'

SCOUR: Contraction scour = 2.0' at 0.5% AEP. Foundations to ledge or 6' below stream bottom.
REQUIRED CHANNEL PROTECTION: Stone Fill, Type IV

PERMIT INFORMATION

AVERAGE DAILY FLOW:	-	DEPTH OR ELEVATION:
ORDINARY LOW WATER:	-	-
ORDINARY HIGH WATER:	-	-

TEMPORARY BRIDGE REQUIREMENTS

STRUCTURE TYPE: None required
CLEAR SPAN (NORMAL TO STREAM):
VERTICAL CLEARANCE ABOVE STREAMBED:
WATERWAY AREA OF FULL OPENING:

ADDITIONAL INFORMATION

TRAFFIC MAINTENANCE NOTES

1. MAINTAIN TRAFFIC ON AN OFF SITE DETOUR.
2. TEMPORARY TRAFFIC SIGNAL ARE NECESSARY ALONG SIDELINE APPROACH
3. SIDEWALKS ARE NOT NECESSARY

DESIGN VALUES

1.	DESIGN LIVE LOAD		HL-93
2.	FUTURE PAVEMENT	d_p:	0.0 INCH
3.	DESIGN SPAN	L:	76.00 FT
4.	MIN. MID-SPAN POS. CAMBER @ RELEASE (PRESTRESSED UNITS)	Δ:	- - -
5.	PRESTRESSING STRAND	f_y:	- - -
6.	PRESTRESSED CONCRETE STRENGTH	f'_c:	- - -
7.	PRESTRESSED CONCRETE RELEASE STRENGTH	f'_{ci}:	- - -
8.	SPECIAL PROVISION (HIGH PERFORMANCE CONCRETE, CLASS A)	f'_c:	4.0 KSI
9.	SPECIAL PROVISION (HIGH PERFORMANCE CONCRETE, CLASS B)	f'_c:	3.5 KSI
10.	CONCRETE HIGH PERFORMANCE, CLASS SCC	f'_c:	4.0 KSI
11.	CONCRETE, CLASS C	f'_c:	3.0 KSI
12.	REINFORCING STEEL	f_y:	60 KSI
13.	STRUCTURAL STEEL AASHTO M270	f_y:	- - -
14.	NOMINAL BEARING RESISTANCE OF SOIL	q_n:	4.0 KSF
15.	SOIL BEARING RESISTANCE FACTOR (REFER TO AASHTO LRFD)	ϕ:	0.45
16.	NOMINAL BEARING RESISTANCE OF ROCK	q_n:	70.0 KSF
17.	ROCK BEARING RESISTANCE FACTOR (REFER TO AASHTO LRFD)	ϕ:	0.45
18.	PILE RESISTANCE FACTOR	ϕ:	- - -
19.	LATERAL PILE DEFLECTION	Δ:	- - -
20.	BASIC WIND SPEED	V_{3s}:	- - -
21.	MINIMUM GROUND SNOW LOAD	p_g:	- - -
22.	SEISMIC DATA PGA: - - -	S_s:	- - -
		S_1:	- - -
23.			
24.			- - -
25.			- - -
26.			- - -

TRAFFIC DATA

YEAR	ADT	DHV	% D	% T	ADTT
2017	1500	170	70	3.9	65
2037	1600	180	70	6	110

20 year ESAL for flexible pavement from 2017 to 2037 : 227000
40 year ESAL for flexible pavement from 2017 to 2057 : 534000
Design Speed : 15 mph

AS BUILT "REBAR" DETAIL

LEVEL I	LEVEL II	LEVEL III
TYPE:	TYPE:	TYPE:
GRADE:	GRADE:	GRADE:

PROJECT NAME: **NEWFANE**
PROJECT NUMBER: **BF 0106(6)**

FILE NAME: s13j306forms.dgn
PROJECT LEADER: C. COTA
DESIGNED BY: C. BURRALL
PRELIMINARY INFORMATION SHEET 1

PLOT DATE: 9/4/2020
DRAWN BY: C. BURRALL
CHECKED BY: M. LONGSTREET
SHEET 2 OF 64

MATERIAL TOLERANCES
(IF USED ON PROJECT)

SURFACE	
- PAVEMENT (TOTAL THICKNESS)	+/- 1/4"
- AGGREGATE SURFACE COURSE	+/- 1/2"
SUBBASE	+/- 1"
SAND BORROW	+/- 1"

BITUMINOUS CONCRETE PAVEMENT MATERIAL REQUIREMENTS

BINDER	70-28	PERFORMANCE GRADE ASPHALT BINDER
GYRATION	65	DESIGN NUMBER OF GYRATIONS

ROADWAY MATERIAL REQUIREMENTS

	THICKNESS	DESCRIPTION
WEARING COURSE	1 1/2"	900.680 SPECIAL PROVISION (BITUMINOUS CONCRETE PAVEMENT) (TYPE IVS)
INTERMEDIATE COURSE	1 1/2"	900.680 SPECIAL PROVISION (BITUMINOUS CONCRETE PAVEMENT) (TYPE IVS)
BASE COURSE	2"	900.680 SPECIAL PROVISION (BITUMINOUS CONCRETE PAVEMENT) (TYPE IIIS)
BUFFER	6"	AGGREGATE SURFACE COURSE
SUBBASE	30"	SUBBASE OF DENSE GRADED CRUSHED STONE
TOPSOIL	4"	TOPSOIL

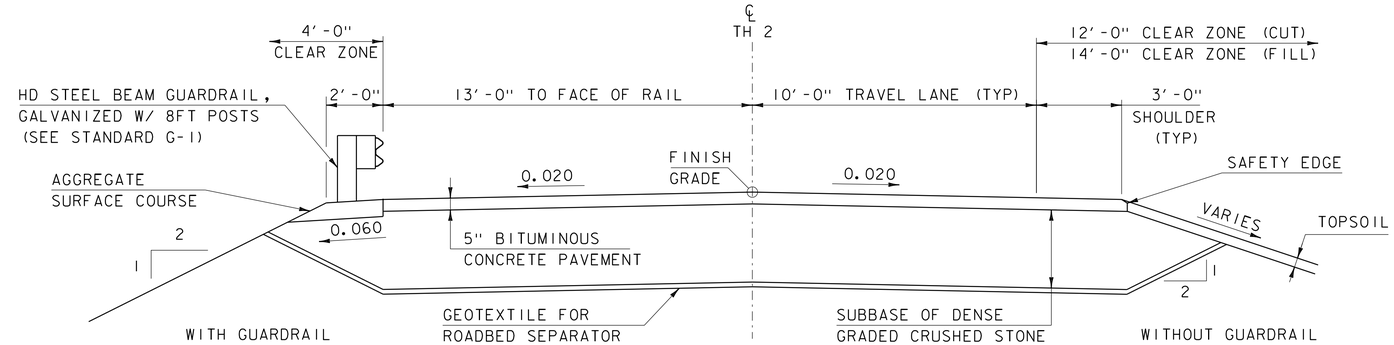

DEPOT RD (TH 2) TYPICAL SECTION
SCALE 3/8" = 1'-0"

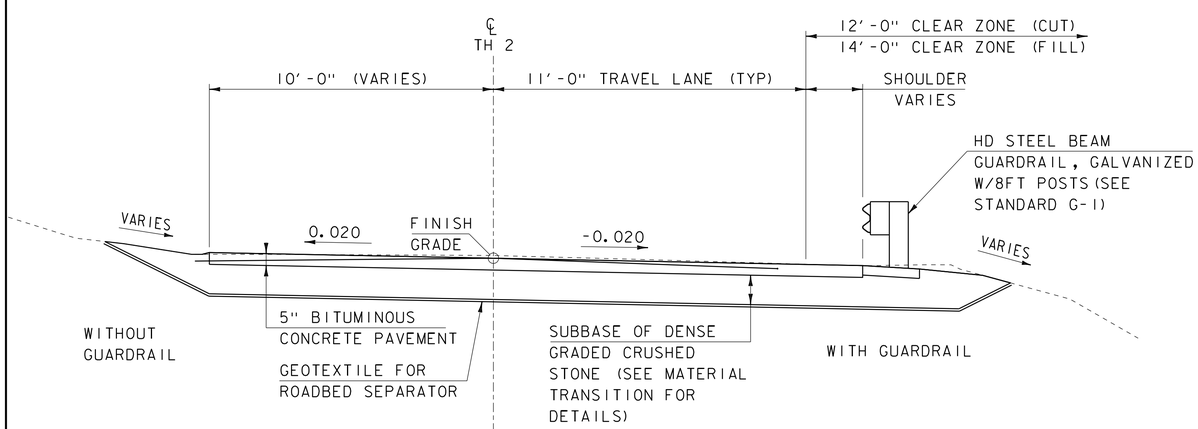

DOVER RD (TH 2) / GRIMES HILL RD (TH 5) TYPICAL SECTION
SCALE 3/8" = 1'-0"

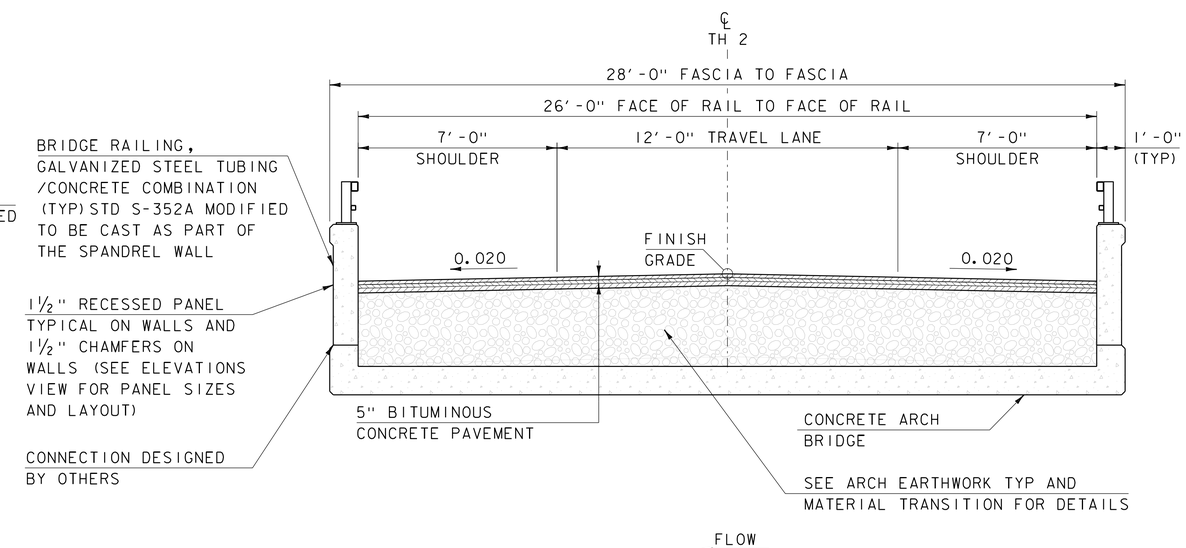

BRIDGE TYPICAL SECTION
SCALE 3/8" = 1'-0"

PROJECT NAME: NEWFANE	
PROJECT NUMBER: BF 0106(6)	
FILE NAME: s13j306typ.dgn	PLOT DATE: 08-SEP-2020
PROJECT LEADER: C. COTA	DRAWN BY: M. LONGSTREET
DESIGNED BY: C. BURRALL	CHECKED BY: C. BURRALL
TYPICAL SECTIONS 1	SHEET 3 OF 64

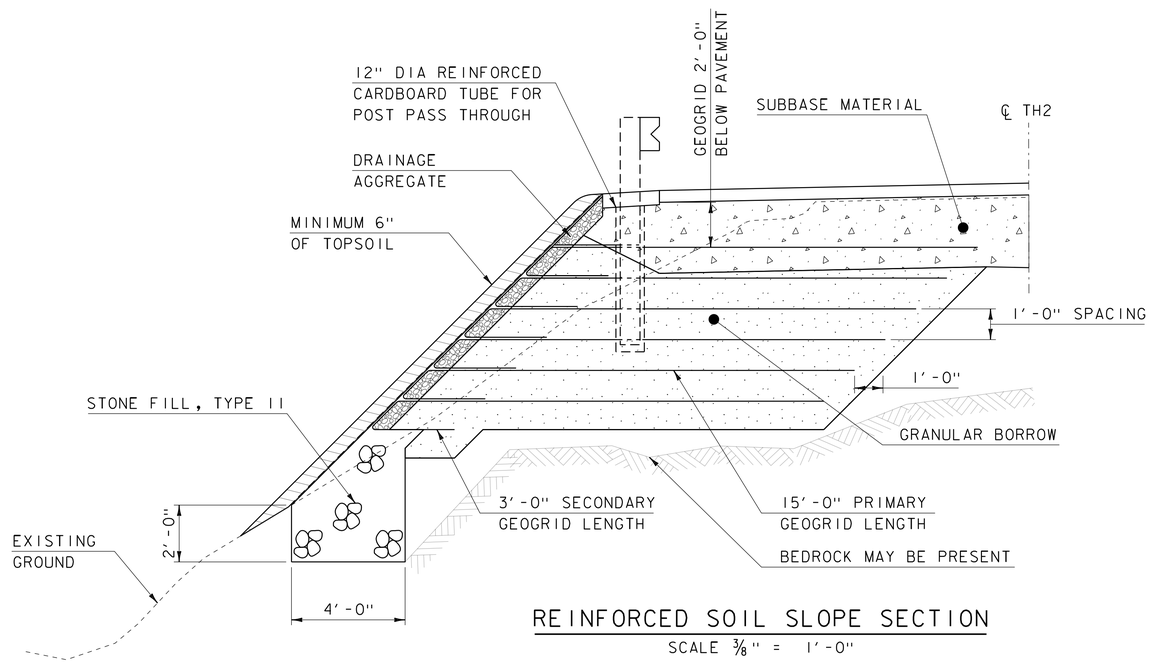

REINFORCED SOIL SLOPE SECTION

SCALE 3/8" = 1'-0"

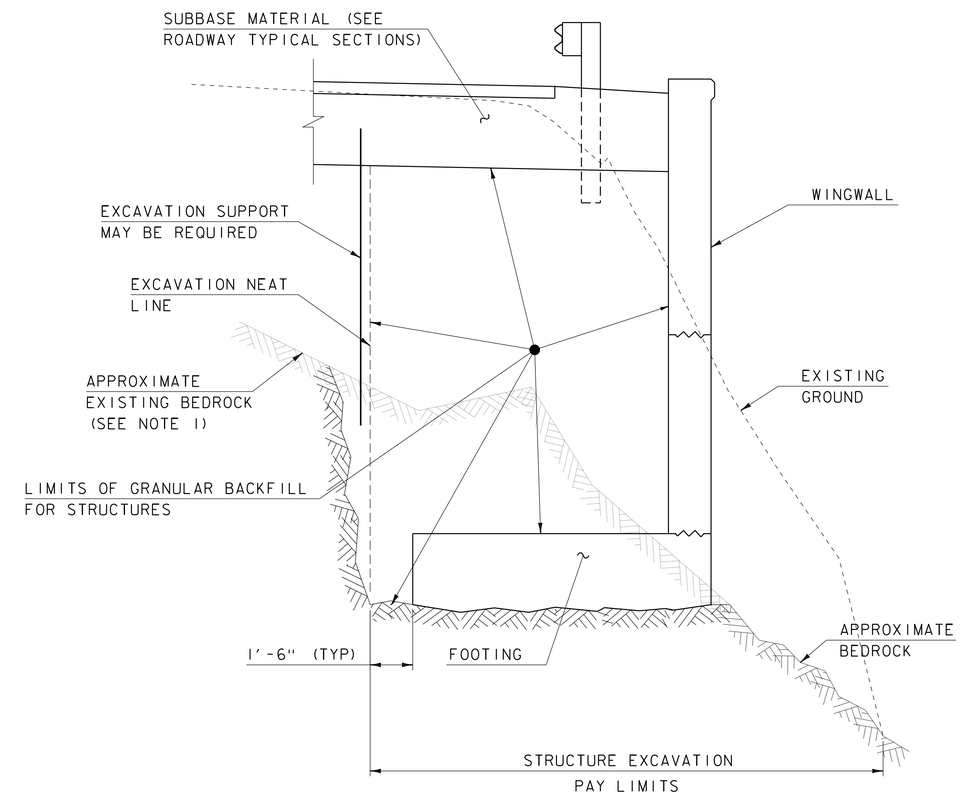

WINGWALL EARTHWORK TYPICAL SECTION

SCALE 1/2" = 1'-0"

NOTES:

1. ACTUAL BEDROCK PROFILES ARE UNKNOWN. APPROXIMATE BEDROCK PROFILES ARE SHOWN. BEDROCK MAY VARY SIGNIFICANTLY FROM WHAT IS SHOWN.

PROJECT NAME: NEWFANE	
PROJECT NUMBER: BF 0106(6)	
FILE NAME: s13j306typ.dgn	PLOT DATE: 08-SEP-2020
PROJECT LEADER: C. COTA	DRAWN BY: M. LONGSTREET
DESIGNED BY: C. BURRALL	CHECKED BY: C. BURRALL
TYPICAL SECTIONS 2	SHEET 4 OF 64

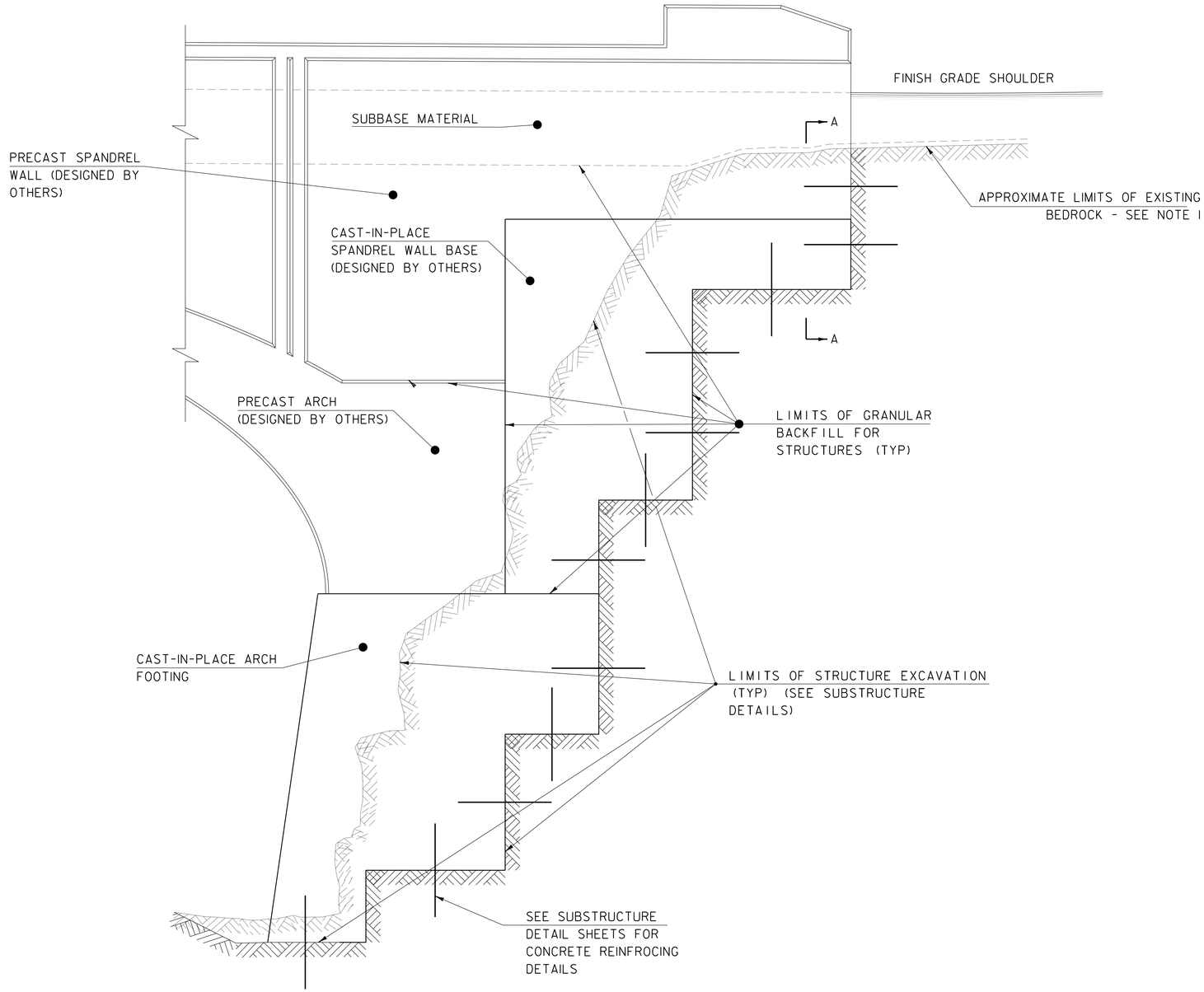

ABUTMENT EARTHWORK TYPICAL SECTION

SCALE: 3/8" = 1'-0"

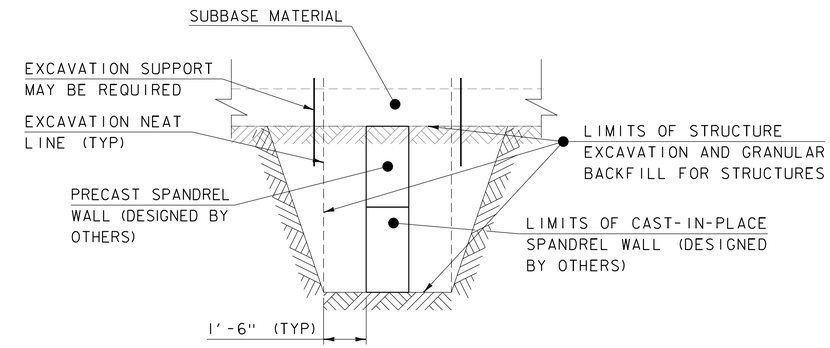

SECTION A-A - SPANDREL WALL TYPICAL SECTION

SCALE: 3/8" = 1'-0"

NOTES:

1. ACTUAL BEDROCK PROFILES ARE UNKNOWN. APPROXIMATE BEDROCK PROFILES ARE SHOWN. BEDROCK MAY VARY SIGNIFCANTLY FROM WHAT IS SHOWN.

PROJECT NAME: NEWFANE	
PROJECT NUMBER: BF 0106(6)	
FILE NAME: sl3j306typ.dgn	PLOT DATE: 08-SEP-2020
PROJECT LEADER: C. COTA	DRAWN BY: G. DARGAN
DESIGNED BY: C. BURRALL	CHECKED BY: C. BURRALL
TYPICAL SECTIONS 3	SHEET 5 OF 64

GENERAL

1. ALL MATERIALS AND CONSTRUCTION SHALL CONFORM TO THE STATE OF VERMONT AGENCY OF TRANSPORTATION STANDARD SPECIFICATIONS FOR CONSTRUCTION 2018, AND ITS LATEST REVISIONS, AND THE AASHTO LRFD BRIDGE DESIGN SPECIFICATION, DATED 2017, AND ITS LATEST REVISIONS.

2. THE CONTRACTOR SHALL PROVIDE A SITE-SPECIFIC EROSION PREVENTION AND SEDIMENT CONTROL PLAN IN ACCORDANCE WITH SECTION 653 OF THE STANDARD SPECIFICATIONS FOR CONSTRUCTION. ESTIMATED QUANTITIES FOR EPSC WORK HAVE BEEN INCLUDED IN THE CONTRACT FOR BIDDING PURPOSES. IF THE CONTRACTOR'S EPSC PLAN REQUIRES ITEMS OF WORK THAT ARE NOT INCLUDED IN THE PLANS IT SHALL BE PAID FOR AS PART OF ITEM 653.03, "MAINTENANCE OF EPSC PLAN."

3. THE AREA(S) OF DISTURBANCE ARE SHOWN ON THE EARTH DISTURBANCE PLANS, WHICH ARE REFERENCED IN THE SPECIAL PROVISIONS, NOTICE TO BIDDER - OTHER SPECIFICATIONS AND CONTRACT REQUIREMENTS.

4. A HISTORIC LAID UP STONE WALL EXISTS ADJACENT TO THE ROADWAY APPROXIMATELY STARTING AT STA 12+60 AND CONTINUING TO STA 14+00 AND BEYOND. THIS WALL SHALL REMAIN UNDISTURBED DURING CONSTRUCTION. SHOULD ANY DAMAGE OCCUR DURING CONSTRUCTION THE CONTRACTOR SHALL RETURN THE WALL TO ITS ORIGINAL CONDITION AT NO ADDITIONAL COST TO THE STATE.

EARTHWORK AND RELATED ITEMS

5. THE REMOVAL OF THE EXISTING STRUCTURE WILL BE PAID UNDER ITEM 529.15 "REMOVAL OF STRUCTURE". THIS WORK INCLUDES REMOVAL OF THE ENTIRE ARCH, SPRANDREL WALLS, BRIDGE RAIL, WINGWALLS, FOOTING, AND ALL PARTS OF THE EXISTING STRUCTURE THAT MAY FALL OUTSIDE THE LIMITS OF STRUCTURE EXCAVATION. AS WELL AS ANY MATERIAL LOCATED WITHIN THE LIMITS OF "REMOVAL OF STRUCTURE" IDENTIFIED IN THE PLANS.

6. REMOVAL OF MATERIAL AND BEDROCK NECESSARY FOR THE INSTALLATION OF THE WINGWALLS, WINGWALL FOOTINGS, SPANDREL WALLS, ARCH, AND ARCH FOOTING OUTSIDE THE LIMITS OF ITEM 529.15 "REMOVAL OF STRUCTURE" WILL BE PAID FOR UNDER ITEM 204.25 "STRUCTURE EXCAVATION".

7. ITEM 204.30 "GRANULAR BACKFILL FOR STRUCTURES" SHALL BE UTILIZED AS BACKFILL OVER THE PRECAST ARCH BELOW THE LIMITS OF SUBBASE. SUBSTITUTION OF LIGHTWEIGHT MATERIAL OR EQUIVALENT MATERIAL PER THE FABRICATOR'S RECOMMENDATION AND DESIGN SHALL BE SUBMITTED TO THE PROJECT MANAGER FOR REVIEW. ANY SUBSITITUION OF MATERIAL WILL BE PAID FOR UNDER ITEM 204.30 "GRANULAR BACKFILL FOR STRUCTURES".

8. IN THE EVENT BEDRCOK IS ENCOUNTERED WITHIN THE LIMITS OF EARTHWORK ALONG THE MAINLINE OR SIDELINE APPROACHES, EXCAVATION NEED NOT EXTEND TO THE BOTTOM OF SUBBASE LIMITS OR REINFORCED SOIL SLOPE LIMITS AS SHOWN. ONLY ENOUGH MATERIAL SHALL BE REMOVED IN ORDER TO FACILITATE DRIVING OF GUARDRAIL POSTS.

REINFORCED SOIL SLOPE

9. A 1 FT LAYER OF DRAINAGE AGGREGATE SHOULD BE PLACED BETWEEN THE REINFORCED SOIL AND THE RETAINED BACKFILL. DRAINAGE AGGREGATE SHOULD BE WRAPPED IN GEOTEXTILE TO PREVENT FINER MATERIALS FROM CLOGGING THE DRAIN. A PIPE SHOULD BE PLACED AT THE BOTTOM OF THE EXCAVATION TO ENSURE GROUNDWATER DRAINS AWAY FROM THE TOE OF THE SLOPE. THIS WORK SHALL BE INCIDENTAL TO ITEM 900.675 "SPECIAL PROVISION (REINFORCED SOIL SLOPE)".

10. FOR INSTALLATION OF THE GUARDRAIL, A MINIMUM OF THE TOP THREE LAYERS OF GEOGRID WILL BE PUNCTURED TO EMBED THE RAIL. IF WOODEN POSTS ARE USED, SECTIONS SHALL BE BOXED OUT IN EACH GEOGRID LAYER DURING INSTALLATION TO ENSURE THE GEOGRID ENDURES NO ADDITIONAL DAMAGE DURING GUARDRAIL INSTALLATION. THE USE OF SONOTUBES AS PLACE HOLDERS AT THE LOCATION OF THE GUARDRAIL IS RECOMMENDED. ALTERNATIVELY, A WEDGE-SHAPED SHOE ATTACHMENT TO FACILITATE INSTALLATION DURING RAIL DRIVING IS PERMITTED. STEEL POSTS CAN BE DRIVEN THROUGH THE GEOGRID WITHOUT ADVERSELY AFFECTING THE PERFORMANCE OF THE REINFORCEMENT.

CONCRETE

11. WINGWALL STEMS AND FOOTINGS SHALL BE PAID FOR UNDER ITEM 900.608 "SPECIAL PROVISION (CONCRETE, HIGH PERFORMANCE CLASS B)".

12. CAST-IN-PLACE CONCRETE FOR THE SPANDREL WALLS AND ARCH FOOTINGS SHALL BE PAID FOR UNDER ITEM 900.608 "SPECIAL PROVISION (CONCRETE, HIGH PERFORMANCE CLASS B)".

13. ANY SUBFOOTING CONCRETE FOR THE ARCH FOOTINGS OR WINGWALL FOOTINGS SHALL BE PAID FOR UNDER ITEM 541.30, "CONCRETE, CLASS C."

14. ALL EXPOSED CONCRETE SURFACES SHALL BE STAINED AND SEALED. PAYMENT WILL BE MADE UNDER ITEM 900.625 "SPECIAL PROVISION (CONCRETE STAINING AND SEALING)".

15. ALL EXPOSED CONCRETE SURFACES SHALL BE PAINTED WITH A SINGLE COAT OF CLEAR GRAFFITI RESISTANT PAINT. PAINT SHALL BE APPLIED PER MANUFACTURER'S RECOMMENDATIONS AND COMPATIBLE WITH THE CONCRETE STAINING AND SEALING PRODUCT. APPLICATION SHALL OCCUR AFTER THE WATERPROOF SEALING OF THE CONCRETE STAINING AND SEALING PRODUCT HAS BEEN APPLIED. PAYMENT WILL BE MADE UNDER ITEM 900.675 "SPECIAL PROVISION (PAINT, GRAFFITI RESISTANT)".

16. A BRIDGE PLAQUE FURNISHED BY THE AGENCY SHALL BE CAST INTO WINGWALL #2. SEE SD-502.00 FOR FURTHER DETAILS.

17. CHAMFER ALL EXPOSED EDGES OF CONCRETE 1" BY 1".

REINFORCING STEEL

18. ALL REINFORCING STEEL IN THE PRECAST ARCH AND PRECAST SPANDREL WALLS, SHALL MEET THE REQUIREMENTS FOR LEVEL II CORROSION RESISTANCE IN ACCORDANCE WITH SECTION 507. PAYMENT FOR ALL REINFORCING WILL BE MADE UNDER THE APPROPRIATE SECTION 540 CONTRACT ITEM.

19. ALL REINFORCING IN THE CAST-IN-PLACE CONCRETE SPANDREL WALLS SHALL MEET THE REQUIREMENTS OF LEVEL II CORROSION RESISTANCE IN ACCORDANCE WITH SECTION 507. PAYMENT FOR THIS REINFORCING WILL BE MADE UNDER ITEM 507.12 "REINFORCING STEEL, LEVEL II".

20. ALL REINFORCING IN THE ARCH FOOTING AND WINGWALLS SHALL MEET THE REQUIREMENTS OF LEVEL I CORROSION RESISTANCE IN ACCORDANCE WITH SECTION 507. PAYMENT FOR THIS REINFORCING WILL BE MADE UNDER ITEM 507.11 "REINFORCING STEEL, LEVEL I".

21. WHEN A REINFORCING STEEL SCHEDULE IS NOT INCLUDED IN THE PLANS FOR A CAST-IN-PLACE CONCRETE COMPONENT, THE CONTRACTOR SHALL SUBMIT DETAILED REINFORCING STEEL FABRICATION DRAWINGS IN ACCORDANCE WITH SECTION 105.03.

22. MINIMUM CLEAR COVER FOR REINFORCING STEEL SHALL BE AS FOLLOWS:

ALONG BACK FACES OF WALLS AGAINST EARTH:	3 INCH
LEVEL III ALONG EXPOSED FACE	2 INCH
ELSEWHERE UNLESS OTHERWISE INDICATED:	3 INCH

PRECAST ARCH AND SPANDREL WALLS

23. THE ARCH AND SPANDREL WALLS SHALL BE DESIGNED BY THE FABRICATOR, INCLUDING THE ANCHORAGE AND CONNECTIONS BETWEEN ELEMENTS. THE CONTRACTOR SHALL SUBMIT FABRICATION DRAWINGS AND CALCULATIONS TO THE ENGINEER IN ACCORDANCE WITH SECTION 105. THE FABRICATOR SHALL SUPPLY THE AGENCY WITH THE LRFD LOAD RATING FACTORS FOR THE ARCH TO COMPLETE THE LOAD RATING TABLE ON THE PRELIMINARY INFORMATION SHEET, ALONG WITH THE DESIGN OF THE PRECAST ARCH STAMPED BY AN ENGINEER REGISTERED IN THE STATE OF VERMONT.

24. PORTIONS OF THE SPANDREL WALLS WILL NEED TO BE CAST-IN-PLACE CONCRETE TO TIE INTO THE BEDROCK. A CONCEPTUAL LIMIT FOR THE CAST-IN-PLACE CONCRETE HAS BEEN INCLUDED IN THE PLANS AND IS SUBJECT TO CHANGE BASED ON FABRICATOR'S DESIGN. THE CAST-IN-PLACE SPANDREL WALL SHALL BE DESIGNED BY A PROFESSIONAL ENGINEER IN THE STATE OF VERMONT. THE CONTRACTOR WILL NEED TO COORDINATE WITH THE SPANDREL WALL FABRICATOR ON THE LIMITS OF THIS WORK, CONNECTIONS, REINFORCING, AND THE DESIGN. PAYMENT FOR THIS WORK WILL BE INCLUDED UNDER ITEM 900.608 "SPECIAL PROVISION (CONCRETE, HIGH PERFORMANCE CLASS B)" AND ITEM 507.12 "REINFORCING STEEL, LEVEL II".

25. THE LUMP SUM COST FOR ITEM 540.10 "PRECAST CONCRETE STRUCTURE (ARCH)" SHALL INCLUDE THE PRECAST ARCH, ALL CONNECTIONS BETWEEN ADJACENT UNITS, AND CONNECTION TO THE FOOTING. ANY KEYWAY OR RECESSED BLOCK OUT IN THE CAST-IN-PLACE FOOTING TO ACCOMMODATE THE PRECAST ARCH CONNECTION SHALL BE COORDINATED BETWEEN THE CONTRACTOR AND ARCH FABRICATOR.

26. THE LUMP SUM COST FOR ITEM 540.10 "PRECAST CONCRETE STRUCTURE (SPANDREL WALLS UPSTREAM)" AND ITEM 540.10 "PRECAST CONCRETE STRUCTURE (SPANDREL WALLS DOWNSTREAM)" SHALL INCLUDE THE PRECAST SPANDREL WALLS, ALL CONNECTIONS BETWEEN ADJACENT UNITS, CONNECTIONS TO THE PRECAST ARCH UNITS, AND BRIDGE RAIL.

27. THE TOP OF THE PRECAST SPANDREL WALLS WILL SERVE AS THE CONCRETE RAIL PORTION FOR STANDARD S-352A BRIDGE RAILING, GALVANIZED STEEL TUBING/CONCRETE COMBINATION. DETAILS AND MODIFICATION TO STANDARD S-352A HAVE BEEN INCLUDED IN THE PLANS. RAIL POST ANCHORAGE COMPONENTS SHALL BE PRECAST INTO THE SPANDREL WALL UNITS. ALL COMPONENTS OF THE BRIDGE RAIL INCLUDING THE CONCRETE, END BLOCKS, STEEL RAIL, AND ATTACHMENTS WILL BE INCIDENTAL TO THE PRECAST SPANDREL WALL ITEMS.

28. THE REQUIRED ARCH DESIGN PARAMETERS FOR THIS PROJECT ARE INDICATED BELOW.

    A. DESIGN REQUIREMENTS = AASHTO LRFD BRIDGE DESIGN SPECIFICATIONS (8TH EDITION)
    B. DESIGN LIVE LOAD = HL-93
    C. NOMINAL BEARING RESISTANCE =
    D. CONCRETE COMPRESSIVE STRENGTH = PER FABRICATOR
    E. REQUIRED DESIGN LIFE = 75 YEARS
    F. DGCS AND GRANULAR BACKFILL FOR STRUCTURES UNIT WEIGHT AND DEAD LOAD, 5" PAVEMENT, HL 93 LIVE LOAD, BRIDGE RAIL, DEAD LOAD OF ARCH AND WALLS

29. THE CAST-IN-PLACE ARCH FOOTINGS ARE DESIGNED FOR THE REACTIONS AND BEHAVIOR SUMMARIZED BELOW. IF THE PROPOSED ARCH REACTIONS AND GEOMETRY VARY BEYOND THE LIMITS DEFINED BELOW, THE FABRICATOR ASSUMES DESIGN RESPONSIBILITY OF THE FOUNDATION, DESIGNS THE NECESSARY REVISIONS TO THE FOUNDATION, AND SUBMIT STRUCTURAL CALCULATIONS FOR THE REVISED DESIGN IN ACCORDANCE WITH SUBSECTION 540.04.

    A. DEAD LOAD (DL)
    B. LIVE LOAD (LL)
    C. EARTH PRESSSURE (EV)
    D. ANY OTHE LOADS

30. THE ACTUAL DIMENSIONS AND CONFIGURATION OF EACH PRECAST UNIT WILL BE DEPENDENT ON THE FABRICATOR, AND MAY DIFFER FROM WHAT IS SHOWN IN THE PLANS. HOWEVER, THE VISIBLE FACE OF THE ARCH, SPANDREL WALLS, FOOTING, AND WINGWALLS MUST MATCH THE AESTHETICS DETAILS SHOWN IN THE PLANS.

31. THE FABRICATOR SHALL MATCHCAST ALL PRECAST UNITS TO ENSURE PROPER FIT-UP BETWEEN ADJACENT PIECES.

32. FABRICATION DRAWINGS FOR THE PRECAST UNITS SHALL INCLUDE A PLAN FOR SHIPPING AND ERECTING UNITS.

33. THE CONTRACTOR IS RESPONSIBLE FOR PROPER FIT-UP OF THE PRECAST AND CAST-IN-PLACE ELEMENTS, PER THE FABRICATOR'S RECOMMENDATIONS, APPROVED FABRICATION AND ENGINEERING DRAWINGS, AND TO THE SATISFACTION OF THE ENGINEER.

34. ONLY A CERTIFIED PRECAST CONCRETE PLANT IS AUTHORIZED TO PROVIDE THE PRECAST COMPONENTS ON THE PROJECT. THE CONTRACTOR IS NOT AUTHORIZED TO SELF-PERFORM THE WORK ASSOCIATED WITH ANY PRECAST PAY ITEMS VIA CAST-IN-PLACE SUBSTITUITION OR CASTING UNITS OFF-SITE.

35. THE SPANDREL WALL DESIGN SHALL INCLUDE DRAINAGE PROVISIONS TO ACCOUNT FOR OR PREVENT HYDROSTATIC PRESSURE BEHIND WALLS. CONCEPTUAL UNDERDRAIN HAS BEEN DETAILED IN THE PLANS.

36. ALL LIFTING POINTS IN THE PRECAST UNITS SHALL BE REMOVABLE TO A MINIMUM CLEAR COVER SPECIFIED IN PLANS. RECESSED LIFTING POINTS AND BLOCK OUTS SHALL BE FILLED WITH A TYPE IV MORTAR PER SUBSECTION 540.11. THE LIFTING POINTS SHALL BE DETAILED IN THE APPROPRIATE FABRICATION DRAWING. PAYMENT FOR THIS WORK WILL BE CONSIDERED INCIDENTAL TO THE APPROPRIATE PRECAST ITEM. TESTING GROUT USED TO FILL LIFTING POINTS AND BLOCKOUTS IS NOT REQUIRED.

37. PAYMENT FOR MORTAR, TYPE IV USED BETWEEN CONNECTIONS OF PRECAST UNTIS SHALL BE INCLUDED IN PAYMENT FOR THE ASSOCIATED PRECAST ITEM. MORTAR, TYPE IV USED FOR THIS PURPOSE MUST MEET THE MATERIAL AND TESTING REQUIREMENTS OF ITEM 541.58 "MORTAR, TYPE IV".

38. NO HOLES MAY BE DRILLED IN ANY PRECAST ELEMENTS WITHOUT THE APPROVAL OF THE FABRICATOR AND THE AGENCY.

39. THE CONTRACTOR SHALL DETERMINE THE METHOD OF FORMING FOR SUBSEQUENT POURS AFTER PLACING ANY PRECAST UNIT. THE CONTRACTOR IS ENCOURAGED TO WORK WITH THE FABRICATOR IF ADDITIONAL SUPPORTS ARE REQUIRED. THE CONTRACTOR CANNOT ATTACH ADDITIONAL FORM OR SUPPORTS BY DRILLING OR SIMILAR MEANS INTO ANY PRECAST UNIT.

40. PREFORMED SHEET MEMBRANE – MEETING THE REQUIREMENTS OF 726.11 – SHALL BE APPLIED OVER THE INTERIOR FACE OF ALL JOINTS BETWEEN THE PRECAST ARCH UNITS, PRECAST SPANDREL WALL UNITS, AND THE CONNECTIONS BETWEEN THE ARCH AND SPANDREL WALLS, AND AS PER THE MANUFACTURER'S INSTRUCTIONS. ANY OVERLAPPING OF MEMBRANE SHALL BE DONE IN A SHINGLED STYLE AND SHALL OVERLAP A MINIMUM OF ONE FOOT. PAYMENT FOR THIS WORK AND MATERIALS IS INCIDENTAL TO THE CORRESPONDING PRECAST PAY ITEM.

41. THE USE OF EQUIPMENT AND THE METHOD OF BACKFILLING AROUND THE BURIED STRUCTURE SHALL BE IN ACCORDANCE WITH THE FABRICATOR'S RECOMMENDATIONS. CARE SHALL BE TAKEN WHEN BACKFILLING AGAINST JOINT SEALING MATERIALS.

SUBSTRUCTURES ON BEDROCK

42. THE ARCH FOOTINGS AND WINGWALL FOOTINGS WILL BE FOUNDED ON BEDROCK AND SHALL BE PLACED ON CLEAN COMPETENT ROCK, FREE OF LOOSE ROCK AND DEBRIS.

43. BEDROCK SHOWN IN THE PLANS IS NOT REPRESENTATIVE OF ACTUAL CONDITIONS BUT AN EXAMPLE OF HOW THE FOUNDATIONS CAN BE CONSTRUCTED ON BEDROCK. THE CONTRACTOR WILL BE RESPONSIBLE FOR ESTABLISHING ACTUAL ELEVATIONS.

44. UPON COMPLETION OF EXCAVATION FOR SUBSTRUCTURES FOUNDED ON BEDROCK AND PRIOR TO PLACING FORMWORK, THE ENGINEER SHALL NOTIFY THE PROJECT MANAGER AND THE VTRANS STATE GEOLOGIST. THE GEOLOGIST WILL DETERMINE IF THE BEDROCK IS COMPETENT TO OBTAIN THE REQUIRED NOMINAL BEARING RESISTANCE. THE CONTRACTOR SHALL NOTIFY THE ENGINEER 72 HOURS PRIOR TO WHEN THE ANALYSIS WILL BE NEEDED.

45. AFTER THE BEDROCK HAS BEEN EXPOSED, ADJUSTMENTS TO THE BOTTOM OF FOOTING ELEVATIONS MAY BE NECESSARY TO MINIMIZE THE BEDROCK REMOVAL AND/OR REDUCE THE AMOUNT OF FOOTING CONCRETE NEEDED. CONTACT THE PROJECT MANAGER FOR POSSIBLE REDESIGN IF THE BEDROCK PROFILES DIFFER FROM THOSE SHOWN ON THE PLANS. NO FURTHER WORK SHALL BE DONE ON THE FOOTINGS UNTIL A REPLY IS RECEIVED FROM THE PROJECT MANAGER. A TURN-AROUND TIME OF UP TO THREE BUSINESS DAYS MAY BE EXPECTED.

46. ANY BEDROCK THAT THE ENGINEER OR THE GEOLOGIST DETERMINE NEEDS TO BE REMOVED WILL BE PAID FOR WITH THE CORRESPONDING EXCAVATION ITEM INCLUDED IN THE CONTRACT. OVERBREAK EXCEEDING THE AVERAGE MAXIMUM ALLOWANCE SPECIFIED IN SUBSECTION 204.06 (B)(1) WILL BE AT THE CONTRACTOR'S EXPENSE. ALL OVERBREAK SHALL BE REPLACED WITH "CONCRETE, CLASS C" AT THE CONTRACTOR'S EXPENSE.

47. THE SUBSTRUCTURE UNITS HAVE BEEN DESIGNED FOR THE TOP OF FOOTING ELEVATIONS SHOWN ON THE PLANS. BEDROCK SHALL BE EXCAVATED DOWN TO THE INDICATED BOTTOM OF FOOTING FOR THE FULL WIDTH OF THE FOOTING CONFIGURATION. IF THE BEDROCK ELEVATION IS GREATER THAN 1'-0" BELOW THE DESIGN BOTTOM OF FOOTING, A SUBFOOTING SHALL BE POURED SO THAT THE DESIGN TOP OF FOOTING IS AT THE REQUIRED ELEVATION. SUBFOOTING CONCRETE SHALL BE PAID UNDER ITEM 541.30, "CONCRETE, CLASS C."

48. THE LIMITS OF THE SUBFOOTING (IF REQUIRED) SHALL BE 1'-0" OUTSIDE THE LIMITS OF THE FOOTING OR AS DIRECTED BY THE RESIDENT ENGINEER. AND BE A MINIMUM OF 1'-0" THICK.

TRAFFIC CONTROL

49. THE CONTRACTOR IS RESPONSIBLE FOR THE DESIGN, SUBMITTAL, AND IMPLEMENTATION OF A SITE-SPECIFIC TRAFFIC CONTROL PLAN. THE SITE-SPECIFIC TRAFFIC CONTROL PLAN SHALL BE DESIGNED IN ACCORDANCE WITH SECTION 641. ALL COSTS OF DESIGNING, SUBMITTING, AND IMPLEMENTING THE SITE-SPECIFIC TRAFFIC CONTROL PLAN WILL BE INCLUDED IN THE PAYMENT OF ITEM 641.11 "TRAFFIC CONTROL, ALL-INCLUSIVE".

50. ACCESS TO ALL DRIVES AND THE TOWN GARAGE SHALL BE MAINTAINED AT ALL TIMES. A CONCEPTUAL 8FT TEMPORARY DRIVE HAS BEEN SHOWN ON THE TRAFFIC CONTROL PLAN IN ORDER TO MAINTAIN ACCESS TO PROPERTIES NEAREST THE BRIDGE ON DEPOT RD (TH 2). ADDITIONAL QUANTITY OF ITEM 301.35 "SUBBASE OF DENSE GRADED CRUSHED STONE" HAS BEEN INCLUDED FOR THIS TEMPORARY WORK. ALL ADDITIONAL WORK NECESSARY TO INSTALL A TEMPORARY DRIVE AND MAINTAIN ACCESS TO THESE PROPERTIES WILL BE INCIDENTAL TO ITEM 641.11 "TRAFFIC CONTROL, ALL-INCLUSIVE".

51. TEMPORARY TRAFFIC BARRIER SHALL MEET THE REQUIREMENTS OF 621.07. PAYMENT FOR FURNISHING, MAINTAINING, INSTALLATION, REMOVAL, AND RESETTING WILL BE INCLUDED UNDER ITEM 641.11, "TRAFFIC CONTROL, ALL-INCLUSIVE."

52. ANY REMOVAL, COVERING AND/ OR RESETTING OF EXISTING TRAFFIC SIGNS, AS DEEMED NECESSARY BY THE RESIDENT ENGINEER, WILL BE INCIDENTAL TO ITEM 641.11 "TRAFFIC CONTROL, ALL-INCLUSIVE".

53. ANY TEMPORARY MEANS OF SUPPORTING EXCAVATION NECESSARY TO MAINTAIN TRAFFIC WILL BE INCLUDED IN THE PAYMENT OF ITEM 641.11 "TRAFFIC CONTROL, ALL-INCLUSIVE". CONSTRUCTION DRAWINGS SHALL BE REQUIRED AS PER SUBSECTION 105.03.

54. PORTABLE CHANGEABLE MESSAGE SIGNS (PCMS) WILL BE PAID FOR SEPARATELY UNDER ITEM 641.15 AND SHALL BE INSTALLED A MINIMUM OF 2 WEEKS PRIOR TO THE START OF THE BRIDGE CLOSURE PERIOD. AT LEAST ONE PCMS SHALL BE POSITIONED IN ADVANCE OF EACH APPROACH TO THE WORK ZONE ADVISING OF THE ACTIVITY AHEAD.

55. TRAFFIC ALONG DOVER ROAD (TH 2) AND GRIMES HILL ROAD (TH 5) SHALL BE MAINTAINED DURING CONSTRUCTION WITH ONE-WAY ALTERNATING TRAFFIC CONTROLLED BY A TEMPORARY TRAFFIC SIGNAL SYSTEM.

56. DEPOT ROAD (TH 2) WILL BE CLOSED DURING CONSTRUCTION AND TRAFFIC WILL BE MAINTAINED ON AN OFF-SITE DETOUR. THE TOWN OF NEWFANE WILL BE RESPONSIBLE FOR SIGNING THE DETOUR. THE INSTALLATION AND MAINTENANCE OF ALL SIGNING ASSOCIATED WITH THE TEMPORARY DETOUR SHALL BE THE RESPONSIBILITY OF THE TOWN OF NEWFANE.

TEMPORARY TRAFFIC SIGNAL AND DRIVEWAY ASSISTANT DEVICE

57. THE TEMPORARY TRAFFIC SIGNAL SYSTEM SHALL BE DESIGNED AND INSTALLED IN ACCORDANCE WITH ITEM 678.40 "TEMPORARY TRAFFIC SIGNAL SYSTEM" AND IN COMPLIANCE WITH THE LATEST EDITION OF THE MUTCD.

58. SIGNAL FACES SHALL BE LED AND CONSIST OF 12 INCH LENSES (RED, YELLOW AND GREEN).

59. LUMINAIRES SHALL BE INSTALLED AT EACH OF THE APPROACHES TO ADEQUATELY LIGHT THE STOP BAR AREAS. PAYMENT WILL BE CONSIDERED INCIDENTAL TO ITEM 678.40 "TEMPORARY TRAFFIC SIGNAL SYSTEM".

60. STOP BARS SHALL BE LOCATED A MINIMUM OF 40 FT AND A MAXIMUM OF 180 FT FROM THE NEAREST SIGNAL HEAD.

61. ALL TEMPORARY SIGNAL EQUIPMENT, SIGNS, ETC. SHALL BELONG TO THE CONTRACTOR AT THE END OF THE PROJECT. THE CONTRACTOR SHALL BE RESPONSIBLE FOR THEIR REMOVAL INCLUDING UTILITY POLES, WIRES, ETC. PAYMENT WILL BE CONSIDERED INCIDENTAL TO ITEM 678.40 "TEMPORARY TRAFFIC SIGNAL SYSTEM".

62. THE CONTRACTOR SHALL BE RESPONSIBLE FOR DETERMINING SIGNAL PHASING AND TIMING. THE CONTRACTOR SHALL SUBMIT A PHASING DIAGRAM AND TIMING SCHEDULE TO THE ENGINEER FOR APPROVAL. THE CONTRACTOR SHALL MAKE THE SIGNALS OPERATIONAL ONLY AFTER RECEIVING APPROVAL OF BOTH THE PHASING DIAGRAM AND TIMING SCHEDULE BY THE ENGINEER. DEVELOPMENT OF THE PHASING DIAGRAM AND TIMING SCHEDULE WILL BE CONSIDERED INCIDENTAL TO ITEM 678.40 "TEMPORARY TRAFFIC SIGNAL SYSTEM". ADDITIONAL ADJUSTMENTS TO SIGNAL TIMING OR PHASING REQUESTED BY THE ENGINEER SHALL BE COMPLETED WITHIN 48 HOURS OF THE REQUEST. PAYMENT FOR ADDITIONAL ADJUSTMENTS TO SIGNAL TIMING OR PHASING WILL BE CONSIDERED INCIDENTAL TO ITEM 678.40 "TEMPORARY TRAFFIC SIGNAL SYSTEM".

63. THE SUBMITTAL FOR ITEM 678.40 "TEMPORARY TRAFFIC SIGNAL SYSTEM" SHALL BE IN CONJUNCTION WITH THE SUBMITTAL FOR ITEM 641.11 "TRAFFIC CONTROL, ALL-INCLUSIVE" AND SHALL INCLUDE AS A MINIMUM, THE SIGNAL LOCATION, TIMING AND PHASING PLAN, VEHICLE DETECTION SYSTEM, AND EMERGENCY VEHICLE PREEMPTION SYSTEM.

64. ITEM 900.650 "SPECIAL PROVISION (DRIVEWAY ASSISTANCE DEVICE)" HAS BEEN INCLUDED FOR PROPERTIES THAT FALL BETWEEN THE TEMPORARY TRAFFIC SIGNALS ALONG DOVER RD (TH 2) AND GRIMES HILL RD (TH 5).

STATE OF VERMONT
AGENCY OF TRANSPORTATION

QUANTITY SHEET 1

SUMMARY OF ESTIMATED QUANTITIES				TOTALS		DESCRIPTIONS			
ROADWAY	TRAINING	EROSION CONTROL	BRIDGE	FULL C.E. ITEMS	GRAND TOTAL	FINAL	UNIT	ITEMS	ITEM NUMBER	ROUND
1					1		LS	CLEARING AND GRUBBING, INCLUDING INDIVIDUAL TREES AND STUMPS	201.10	
570					570		CY	COMMON EXCAVATION	203.15	
103					103		CY	TRENCH EXCAVATION OF EARTH	204.20	
1					1		CY	TRENCH EXCAVATION OF EARTH, EXPLORATORY (N.A.B.I.)	204.22	
			370		370		CY	STRUCTURE EXCAVATION	204.25	
			750		750		CY	GRANULAR BACKFILL FOR STRUCTURES	204.30	
1400					1400		SY	COARSE-MILLING, BITUMINOUS PAVEMENT	210.10	
810					810		CY	SUBBASE OF DENSE GRADED CRUSHED STONE	301.35	
20					20		CY	AGGREGATE SURFACE COURSE	401.10	
19					19		CWT	EMULSIFIED ASPHALT	404.65	
1					1		LU	PRICE ADJUSTMENT, ASPHALT CEMENT (N.A.B.I.)	406.50	
			11680		11680		LB	REINFORCING STEEL, LEVEL I	507.11	
			3710		3710		LB	REINFORCING STEEL, LEVEL II	507.12	
			320		320		LF	DRILLING AND GROUTING DOWELS	507.16	
			1		1		EACH	REMOVAL OF STRUCTURE (3000 SF - EST.)	529.15	
			1		1		LS	PRECAST CONCRETE STRUCTURE (ARCH)	540.10	
			1		1		LS	PRECAST CONCRETE STRUCTURE (SPANDREL WALL DOWNSTREAM)	540.10	
			1		1		LS	PRECAST CONCRETE STRUCTURE (SPANDREL WALL UPSTREAM)	540.10	
			20		20		CY	CONCRETE, CLASS C	541.30	
64					64		LF	18" CPEP(SL)	601.2615	
3					3		EACH	PRECAST REINFORCED CONCRETE DROP INLET WITH CAST IRON GRATE	604.18	
1					1		MGAL	DUST CONTROL WITH WATER	609.10	
		20			20		CY	STONE FILL, TYPE II	613.11	
1					1		EACH	RELOCATE MAILBOX, SINGLE SUPPORT	617.10	
138					138		LF	HD STEEL BEAM GUARDRAIL, GALVANIZED	621.21	
2					2		EACH	ANCHOR FOR STEEL BEAM RAIL	621.60	
4					4		EACH	GUARDRAIL APPROACH SECTION, CONC COMB BRIDGE RAILING TL-3	621.748	
190					190		LF	REMOVAL AND DISPOSAL OF GUARDRAIL	621.80	
50					50		HR	UNIFORMED TRAFFIC OFFICERS	630.10	
1000					1000		HR	FLAGGERS	630.15	
				1	1		LS	FIELD OFFICE, ENGINEERS	631.10	
				1	1		LS	TESTING EQUIPMENT, CONCRETE	631.16	
				1	1		LS	TESTING EQUIPMENT, BITUMINOUS	631.17	
				3000	3000		DL	FIELD OFFICE COMMUNICATIONS (N.A.B.I.)	631.26	
8					8		EACH	CPM SCHEDULE	633.10	
	520				520		HR	EMPLOYEE TRAINEESHIP	634.10	
1					1		LS	MOBILIZATION/DEMOBILIZATION	635.11	
1					1		LS	TRAFFIC CONTROL, ALL-INCLUSIVE	641.11	
4					4		EACH	PORTABLE CHANGEABLE MESSAGE SIGN	641.15	
630					630		LF	DURABLE 4 INCH WHITE LINE, POLYUREA	646.404	

DETAILED SUMMARY OF QUANTITIES

QUANTITIES	UNIT	ITEMS
		EARTHWORKS SUMMARY
		FILL AVAILABLE
342	CY	COMMON EXCAVATION (570 x 0.6)
31	CY	TRENCH EXCAVATION (103 x 0.3)
111	CY	STRUCTURE EXCAVATION (370 x 0.3)
6	CY	ROUNDING
490	**CY**	**TOTAL FILL AVAILABLE**
		FILL REQUIRED
0	CY	FACTORED FILL (0 x 1.15)
0	CY	ROUNDING
0	**CY**	**TOTAL FILL REQUIRED**
490	**CY**	**TOTAL WASTE MATERIAL**
		SPECIAL PROVISION
		(BITUMINOUS CONCRETE PAVEMENT, SMALL QUANTITY)
196	TON	BASE COURSE
111	TON	INTERMEDIATE COURSE
123	TON	WEARING COURSE
		(N.A.B.I.) = NOT A BID ITEM

PROJECT NAME: NEWFANE
PROJECT NUMBER: BF 0106(6)

FILE NAME: s13j306qty.dgn
PROJECT LEADER: C. COTA
DESIGNED BY: C. BURRALL
QUANTITY SHEET 1

PLOT DATE: 08-SEP-2020
DRAWN BY: R. HOOD
CHECKED BY: C. BURRALL
SHEET 8 OF 64

STATE OF VERMONT
AGENCY OF TRANSPORTATION

QUANTITY SHEET 2

SUMMARY OF ESTIMATED QUANTITIES					TOTALS		DESCRIPTIONS			
ROADWAY	TRAINING	EROSION CONTROL	BRIDGE	FULL C.E. ITEMS	GRAND TOTAL	FINAL	UNIT	ITEMS	ITEM NUMBER	ROUND
1080					1080		LF	DURABLE 4 INCH YELLOW LINE, POLYUREA	646.414	
22					22		LF	DURABLE 24 INCH STOP BAR, POLYUREA	646.484	
6					6		EACH	DURABLE LETTER OR SYMBOL, POLYUREA	646.494	
1600					1600		SY	GEOTEXTILE FOR ROADBED SEPARATOR	649.11	
		120			120		SY	GEOTEXTILE UNDER STONE FILL	649.31	
		10			10		LB	SEED	651.15	
		10			10		LB	SEED, WINTER RYE	651.17	
		30			30		LB	FERTILIZER	651.18	
		0.25			0.25		TON	AGRICULTURAL LIMESTONE	651.20	
		40			40		CY	TOPSOIL	651.35	
		30			30		SY	GRUBBING MATERIAL (12")	651.40	
		1			1		LS	EPSC PLAN	653.01	
		30			30		HR	MONITORING EPSC PLAN	653.02	
		1			1		LU	MAINTENANCE OF EPSC PLAN (N.A.B.I.)	653.03	
		0.25			0.25		TON	HAY MULCH	653.10	
		290			290		SY	ROLLED EROSION CONTROL PRODUCT, TYPE I	653.20	
		40			40		CY	CHECK DAM, TYPE I	653.25	
		45			45		CY	STABILIZED CONSTRUCTION ENTRANCE	653.35	
		70			70		LF	SILT FENCE, TYPE I	653.475	
		360			360		LF	BARRIER FENCE	653.50	
		760			760		LF	PROJECT DEMARCATION FENCE	653.55	
107					107		SF	TRAFFIC SIGNS, TYPE A	675.20	
140					140		LF	SQUARE TUBE SIGN POST AND ANCHOR	675.341	
13					13		EACH	REMOVING SIGNS	675.50	
1					1		EACH	RESETTING SIGNS	675.60	
4					4		EACH	DELINEATOR WITH STEEL POST	676.10	
1					1		EACH	TEMPORARY TRAFFIC SIGNAL SYSTEM	678.40	
			310		310		CY	SPECIAL PROVISION (CONCRETE, HIGH PERFORMANCE CLASS B)	900.608	
2					2		EACH	SPECIAL PROVISION (DRIVEWAY ASSISTANCE DEVICE)	900.620	
			100		100		GAL	SPECIAL PROVISION (CONCRETE STAINING AND SEALING)	900.625	
1					1		LU	SPECIAL PROVISION (MAT DENSITY PAY ADJUSTMENT, SMALL QUANTITY)(N.A.B.I.)	900.650	
1					1		LU	SPECIAL PROVISION (MIXTURE PAY ADJUSTMENT)(N.A.B.I.)	900.650	
			900		900		SY	SPECIAL PROVISION (PAINT, GRAFFITI RESISTANT)	900.675	
30					30		SY	SPECIAL PROVISION (REINFORCED SOIL SLOPE)	900.675	
430					430		TON	SPECIAL PROVISION (BITUMINOUS CONCRETE PAVEMENT, SMALL QUANTITY)	900.680	

DETAILED SUMMARY OF QUANTITIES

QUANTITIES	UNIT	ITEMS
		(N.A.B.I.) = NOT A BID ITEM

PROJECT NAME: NEWFANE
PROJECT NUMBER: BF 0106(6)

FILE NAME: s13j306qty.dgn
PROJECT LEADER: C. COTA
DESIGNED BY: C. BURRALL
QUANTITY SHEET 2

PLOT DATE: 08-SEP-2020
DRAWN BY: R. HOOD
CHECKED BY: C. BURRALL
SHEET 9 OF 64

STATE OF VERMONT
AGENCY OF TRANSPORTATION

BRIDGE QUANTITY SHEET 1

SUMMARY OF BRIDGE QUANTITIES			TOTALS	DESCRIPTIONS		
ABUTMENT 1	SUPER-STRUCTURE	ABUTMENT 2	BRIDGE TOTAL	UNIT	ITEMS	ITEM NUMBER
250		120	370	CY	STRUCTURE EXCAVATION	204.25
422		328	750	CY	GRANULAR BACKFILL FOR STRUCTURES	204.30
7900		3780	11680	LB	REINFORCING STEEL, LEVEL I	507.11
1855		1855	3710	LB	REINFORCING STEEL, LEVEL II	507.12
160		160	320	LF	DRILLING AND GROUTING DOWELS	507.16
	1		1	EACH	REMOVAL OF STRUCTURE (3000 SF - EST.)	529.15
0.5		0.5	1	LS	PRECAST CONCRETE STRUCTURE (ARCH)	540.10
0.5		0.5	1	LS	PRECAST CONCRETE STRUCTURE (SPANDREL WALL DOWNSTREAM)	540.10
0.5		0.5	1	LS	PRECAST CONCRETE STRUCTURE (SPANDREL WALL UPSTREAM)	540.10
10		10	20	CY	CONCRETE, CLASS C	541.30
165		145	310	CY	SPECIAL PROVISION (CONCRETE, HIGH PERFORMANCE CLASS B)	900.608
50	10	40	100	GAL	SPECIAL PROVISION (CONCRETE STAINING AND SEALING)	900.625
430	90	380	900	SY	SPECIAL PROVISION (PAINT, GRAFFITI RESISTANT)	900.675

DETAILED SUMMARY OF QUANTITIES		
QUANTITIES	UNIT	ITEMS

PROJECT NAME: NEWFANE
PROJECT NUMBER: BF 0106(6)

FILE NAME: s13j306qty.dgn
PROJECT LEADER: C. COTA
DESIGNED BY: C. BURRALL
BRIDGE QUANTITY SHEET

PLOT DATE: 08-SEP-2020
DRAWN BY: R. HOOD
CHECKED BY: C. BURRALL
SHEET 10 OF 64

GENERAL INFORMATION

SYMBOLOGY LEGEND NOTE

THE SYMBOLOGY ON THIS SHEET IS INTENDED TO COVER STANDARD CONVENTIONAL SYMBOLOGY. THE SYMBOLOGY IS USED FOR EXISTING & PROPOSED FEATURES WITH HEAVIER LINEWEIGHT, IN COMBINATION WITH PROJECT ANNOTATION, AS NOTED ON PROJECT PLAN SHEETS. THIS LEGEND SHEET COVERS THE BASICS. SYMBOLOGY ON PLANS MAY VARY, PLAN ANNOTATIONS AND NOTES SHOULD BE USED TO CLARIFY AS NEEDED.

R.O.W. ABBREVIATIONS (CODES) & SYMBOLS

POINT	CODE	DESCRIPTION
	BF	BARRIER FENCE
	CH	CHANNEL EASEMENT
	CONST	CONSTRUCTION EASEMENT
	CUL	CULVERT EASEMENT
	D&C	DISCONNECT & CONNECT
	DIT	DITCH EASEMENT
	DR	DRAINAGE EASEMENT
	DRIVE	DRIVEWAY EASEMENT
	EC	EROSION CONTROL
	HWY	HIGHWAY EASEMENT
	I&M	INSTALL & MAINTAIN EASEMENT
	LAND	LANDSCAPE EASEMENT
	PDF	PROJECT DEMARCATION FENCE
	R&RES	REMOVE & RESET
	R&REP	REMOVE & REPLACE
	R.T.& I.	RIGHT, TITLE, AND INTEREST
	SR	SLOPE RIGHT
	UE	UTILITY EASEMENT
	(P)	PERMANENT EASEMENT
	(T)	TEMPORARY EASEMENT
■	BNDNS	BOUND SET
⊡	BNDNS	BOUND TO BE SET
◎	IPNF	IRON PIN FOUND
●	IPNS	IRON PIN TO BE SET
⊠	CALC	EXISTING ROW POINT
○	PROW	PROPOSED ROW POINT
[LENGTH]		LENGTH CARRIED ON NEXT SHEET

COMMON TOPOGRAPHIC POINT SYMBOLS

POINT	CODE	DESCRIPTION
	APL	BOUND APPARENT LOCATION
	BM	BENCHMARK
	BND	BOUND
	CB	CATCH BASIN
	COMB	COMBINATION POLE
	DITHR	DROP INLET THROATED DNC
	EL	ELECTRIC POWER POLE
	FPOLE	FLAGPOLE
	GASFIL	GAS FILLER
	GP	GUIDE POST
	GSO	GAS SHUT OFF
	GUY	GUY POLE
	GUYW	GUY WIRE
	GV	GATE VALVE
	H	TREE HARDWOOD
	HCTRL	CONTROL HORIZONTAL
	HVCTRL	CONTROL HORIZ. & VERTICAL
	HYD	HYDRANT
	IP	IRON PIN
	IPIPE	IRON PIPE
	LI	LIGHT - STREET OR YARD
	MB	MAILBOX
	MH	MANHOLE (MH)
	MM	MILE MARKER
	PM	PARKING METER
	PMK	PROJECT MARKER
	POST	POST STONE/WOOD
	RRSIG	RAILROAD SIGNAL
	RRSL	RAILROAD SWITCH LEVER
	S	TREE SOFTWOOD
	SAT	SATELLITE DISH
	SHRUB	SHRUB
	SIGN	SIGN
	STUMP	STUMP
	TEL	TELEPHONE POLE
	TIE	TIE
	TSIGN	SIGN W/DOUBLE POST
	VCTRL	CONTROL VERTICAL
	WELL	WELL
	WSO	WATER SHUT OFF

THESE ARE COMMON VAOT SURVEY POINT SYMBOLS FOR EXISTING FEATURES, ALSO USED FOR PROPOSED FEATURES WITH HEAVIER LINEWEIGHT, IN COMBINATION WITH PROPOSED ANNOTATION.

PROPOSED GEOMETRY CODES

CODE	DESCRIPTION
PC	POINT OF CURVATURE
PI	POINT OF INTERSECTION
CC	CENTER OF CURVE
PT	POINT OF TANGENCY
PCC	POINT OF COMPOUND CURVE
PRC	POINT OF REVERSE CURVE
POB	POINT OF BEGINNING
POE	POINT OF ENDING
STA	STATION PREFIX
AH	AHEAD STATION SUFFIX
BK	BACK STATION SUFFIX
D	CURVE DEGREE OF (100FT)
R	CURVE RADIUS OF
T	CURVE TANGENT LENGTH
L	CURVE LENGTH OF
E	CURVE EXTERNAL DISTANCE
CB	CHORD BEARING

UTILITY SYMBOLOGY

UNDERGROUND UTILITIES

UGU	UTILITY (GENERIC-UNKNOWN)
UT	TELEPHONE
UE	ELECTRIC
UC	CABLE (TV)
UEC	ELECTRIC+CABLE
UET	ELECTRIC+TELEPHONE
UCT	CABLE+TELEPHONE
UECT	ELECTRIC+CABLE+TELEPHONE
G	GAS LINE
W	WATER LINE
S	SANITARY SEWER (SEPTIC)

ABOVE GROUND UTILITIES (AERIAL)

AGU	UTILITY (GENERIC-UNKNOWN)
T	TELEPHONE
E	ELECTRIC
C	CABLE (TV)
EC	ELECTRIC+CABLE
ET	ELECTRIC+TELEPHONE
AER E&T	ELECTRIC+TELEPHONE
CT	CABLE+TELEPHONE
ECT	ELECTRIC+CABLE+TELEPHONE
	UTILITY POLE GUY WIRE

PROJECT CONSTRUCTION SYMBOLOGY

PROJECT DESIGN & LAYOUT SYMBOLOGY

CZ	CLEAR ZONE
	PLAN LAYOUT MATCHLINE

PROJECT CONSTRUCTION FEATURES

	TOP OF CUT SLOPE
	TOE OF FILL SLOPE
	STONE FILL
	BOTTOM OF DITCH ℄
	CULVERT PROPOSED
	STRUCTURE SUBSURFACE
PDF	PROJECT DEMARCATION FENCE
BF	BARRIER FENCE
	TREE PROTECTION ZONE (TPZ)
	STRIPING LINE REMOVAL
	SHEET PILES

CONVENTIONAL BOUNDARY SYMBOLOGY

BOUNDARY LINES

TOWN LINE	TOWN BOUNDARY LINE
COUNTY LINE	COUNTY BOUNDARY LINE
STATE LINE	STATE BOUNDARY LINE
	PROPOSED STATE R.O.W. (LIMITED ACCESS)
	PROPOSED STATE R.O.W.
	STATE ROW (LIMITED ACCESS)
	STATE ROW
	TOWN ROW
	PERMANENT EASEMENT LINE (P)
	TEMPORARY EASEMENT LINE (T)
	SURVEY LINE
P/L	PROPERTY LINE (P/L)
SR	SLOPE RIGHTS
6f	6F PROPERTY BOUNDARY
4f	4F PROPERTY BOUNDARY
HAZ	HAZARDOUS WASTE

EPSC LAYOUT PLAN SYMBOLOGY

EPSC MEASURES

	FILTER CURTAIN
	SILT FENCE
	SILT FENCE WOVEN WIRE
	CHECK DAM
	DISTURBED AREAS REQUIRING RE-VEGETATION
	EROSION MATTING

SEE EPSC DETAIL SHEETS FOR ADDITIONAL SYMBOLOGY

ENVIRONMENTAL RESOURCES

	WETLAND BOUNDARY
	RIPARIAN BUFFER ZONE
	WETLAND BUFFER ZONE
	SOIL TYPE BOUNDARY
T&E	THREATENED & ENDANGERED SPECIES
HAZ	HAZARDOUS WASTE AREA
AG	AGRICULTURAL LAND
HABITAT	FISH & WILDLIFE HABITAT
FLOOD PLAIN	FLOOD PLAIN
OHW	ORDINARY HIGH WATER (OHW)
	STORM WATER
	USDA FOREST SERVICE LANDS
	WILDLIFE HABITAT SUIT/CONN

ARCHEOLOGICAL & HISTORIC

ARCH	ARCHEOLOGICAL BOUNDARY
HISTORIC DIST	HISTORIC DISTRICT BOUNDARY
HISTORIC	HISTORIC AREA
H	HISTORIC STRUCTURE

CONVENTIONAL TOPOGRAPHIC SYMBOLOGY

EXISTING FEATURES

	ROAD EDGE PAVEMENT
	ROAD EDGE GRAVEL
	DRIVEWAY EDGE
	DITCH
	FOUNDATION
	FENCE (EXISTING)
	FENCE WOOD POST
	FENCE STEEL POST
	GARDEN
	ROAD GUARDRAIL
	RAILROAD TRACKS
	CULVERT (EXISTING)
	STONE WALL
	WALL
	WOOD LINE
	BRUSH LINE
	HEDGE
	BODY OF WATER EDGE
	LEDGE EXPOSED

PROJECT NAME: NEWFANE
PROJECT NUMBER: BF 0106(6)

FILE NAME: sl3j306forms.dgn
PROJECT LEADER: C. COTA
DESIGNED BY: C. BURRALL
CONVENTIONAL SYMBOLOGY LEGEND

PLOT DATE: 08-SEP-2020
DRAWN BY: M. LONGSTREET
CHECKED BY: C. BURRALL
SHEET 11 OF 64

GPS CONTROL POINTS

PT #1 SHOSKES

NORTH = 160026.0120
EAST = 1589110.8970
ELEV. = 587.330

TO REACH FROM THE INTERSECTION OF U.S. ROUTE 5 AND VERMONT ROUTE 30 NORTH IN BRATTLEBORO, GO NORTH ON VT ROUTE 30 FOR 8.8 MI (14.2 KM) TO THE INTERSECTION OF TOWN HIGHWAY 2 LEFT (ROAD LEADING TO WILLIAMSVILLE, SOUTH NEWFANE, EAST DOVER, DOVER, AND WEST DOVER). TURN LEFT AND GO NORTH AND WEST ALONG TH2 FOR 2 MI (3.2 KM) TO THE BRIDGE OVER ROCK RIVER. AT THE END OF THE BRIDGE TURN LEFT AND GO WEST ALONG TH2 FOR 0.6 MI (1.8 KM) TO THE COVERED BRIDGE OVER ROCK RIVER. CONTINUE STRAIGHT ON TH2 FOR 0.4 MI (0.6 KM) TO THE MARK ON THE LEFT. THE MARK IS SET IN THE TOP OF A 30 CM DIAMETER CONCRETE MONUMENT POURED 1.3 M (4.3 FT) DEEP. IT IS 4.8 M (15.7 FT) SOUTHEAST OF AND ABOUT 0.2 M (0.7 FT) HIGHER THAN THE CENTERLINE OF TH2, 11.8 M (38.7 FT) NORTHEAST OF THE NORTHEAST END OF A STONEWALL, 39.3 M (128.9 FT) NORTHEAST OF THE CENTERLINE OF GRAVEL DRIVE LEADING TO THE SHOSHKES RESIDENCE, AND 1.6 M (5.2 FT) SOUTHWEST OF POLE NO.39/93 AND FIBERGLASS WITNESS POST.

PT #2 SHOSKES AZ MK

NORTH = 161007.5780
EAST = 1589488.8650
ELEV. = 565.030

TO REACH FROM THE INTERSECTION OF U.S. ROUTE 5 AND VERMONT ROUTE 30 NORTH IN BRATTLEBORO, GO NORTH ON VT ROUTE 30 FOR 8.8 MI (14.2 KM) TO THE INTERSECTION OF TOWN HIGHWAY 2 LEFT (ROAD LEADING TO WILLIAMSVILLE, SOUTH NEWFANE, EAST DOVER, DOVER, AND WEST DOVER). TURN LEFT AND GO NORTH AND WEST ALONG TH2 FOR 2 MI (3.2 KM) TO THE BRIDGE OVER ROCK RIVER. AT THE END OF THE BRIDGE TURN LEFT AND GO WEST ALONG TH2 FOR 1.1 MI (1.8 KM) TO THE COVERED BRIDGE OVER ROCK RIVER. CONTINUE STRAIGHT ON TH2 FOR 0.2 MI (0.3 KM) TO THE MARK ON THE RIGHT. THE MARK IS SET IN THE TOP OF A LARGE BOULDER ABOUT 0.5 M (1.6 FT) BELOW GROUND SURFACE ACCESSIBLE BY AN ACCESS COVER. IT IS 6.6 M (21.7 FT) NORTHWEST OF AND ABOUT 0.7 M (2.3 FT) LOWER THAN THE CENTERLINE OF TH2, 23.5 M (77.1 FT) SOUTHWEST OF POLE NO.61/86/32, 8.4 M (27.6 FT) SOUTHEAST OF A 30 CM WHITE PINE, AND 0.4 M (1.3 FT) SOUTHEAST OF A FIBERGLASS WITNESS POST.

TRAVERSE TIES

HVCTRL #9

NORTH = 163141.9040
EAST = 1592969.8010
ELEV. = 525.581

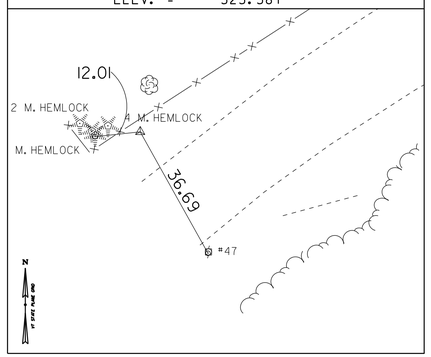

HVCTRL #10

NORTH = 163351.5730
EAST = 1593429.4060
ELEV. = 526.922

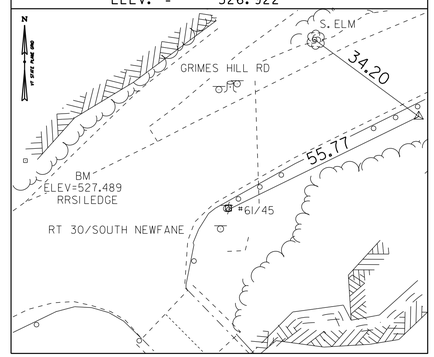

NORTH =	
EAST =	
ELEV. =	

NORTH =	
EAST =	
ELEV. =	

NORTH =	
EAST =	
ELEV. =	

CONTROL LINE DATA - Dover Road (TH 2) & Grimes Hill Road (TH 5) Combined

POINT ID	BEARING	DISTANCE (FEET)	NORTHING (Y)	EASTING (X)	PC	POB-POE	PT	DELTA	R	L	T
1002	N 62°23'30" E	365.00 '	163183.95	1593074.62		9+00.00					
	N 88°29'13" E	314.43 '	163406.80	1593500.74	12+65.00		14+92.72	26°05'42.75"	500.00 '	227.72 '	115.87 '
1006			163415.11	1593815.06		16+91.29					

CONTROL LINE DATA - Depot Road (TH 2 Over Bridge)

POINT ID	BEARING	DISTANCE (FEET)	NORTHING (Y)	EASTING (X)	PC	POB-POE	PT	DELTA	R	L	T
1000	S 44°35'00" E	170.00 '	163339.15	1593323.32		49+75.00					
	S 62°00'00" E	133.50 '	163190.80	1593469.53	51+45.00		52+20.99	17°25'00.00"	-250.00 '	75.99 '	38.29 '
	S 57°30'00" E	109.29 '	163109.67	1593622.09	53+16.21		53+94.75	4°30'00.00"	1000.00 '	78.54 '	39.29 '
10			163050.95	1593714.27		54+64.75					

DATUM

VERTICAL NAVD88
HORIZONTAL NAD83(92)
ADJUSTMENT COMPASS

PROJECT NAME: NEWFANE
PROJECT NUMBER: BF 0106(6)

FILE NAME: x13j306tie
PROJECT LEADER: C. COTA
DESIGNED BY: C. BURRALL
TIE SHEET

PLOT DATE: 08-SEP-2020
DRAWN BY: C. CYR
CHECKED BY: P. BEYOR
SHEET 12 OF 64

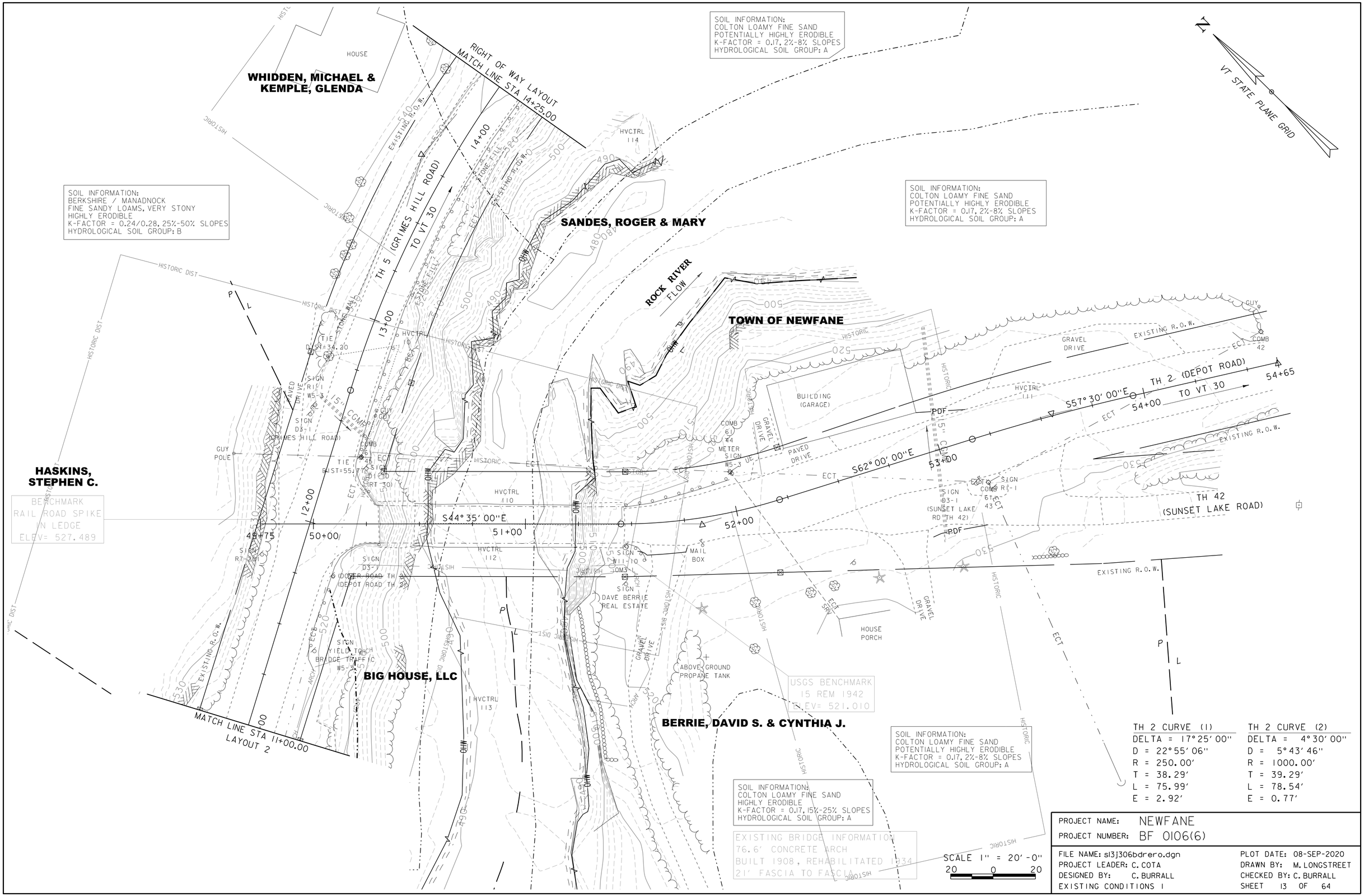

TH 2 CURVE (1)	TH 2 CURVE (2)
DELTA = 17°25'00"	DELTA = 4°30'00"
D = 22°55'06"	D = 5°43'46"
R = 250.00'	R = 1000.00'
T = 38.29'	T = 39.29'
L = 75.99'	L = 78.54'
E = 2.92'	E = 0.77'

PROJECT NAME: NEWFANE
PROJECT NUMBER: BF 0106(6)

FILE NAME: s13j306bdrero.dgn
PROJECT LEADER: C. COTA
DESIGNED BY: C. BURRALL
EXISTING CONDITIONS 1

PLOT DATE: 08-SEP-2020
DRAWN BY: M. LONGSTREET
CHECKED BY: C. BURRALL
SHEET 13 OF 64

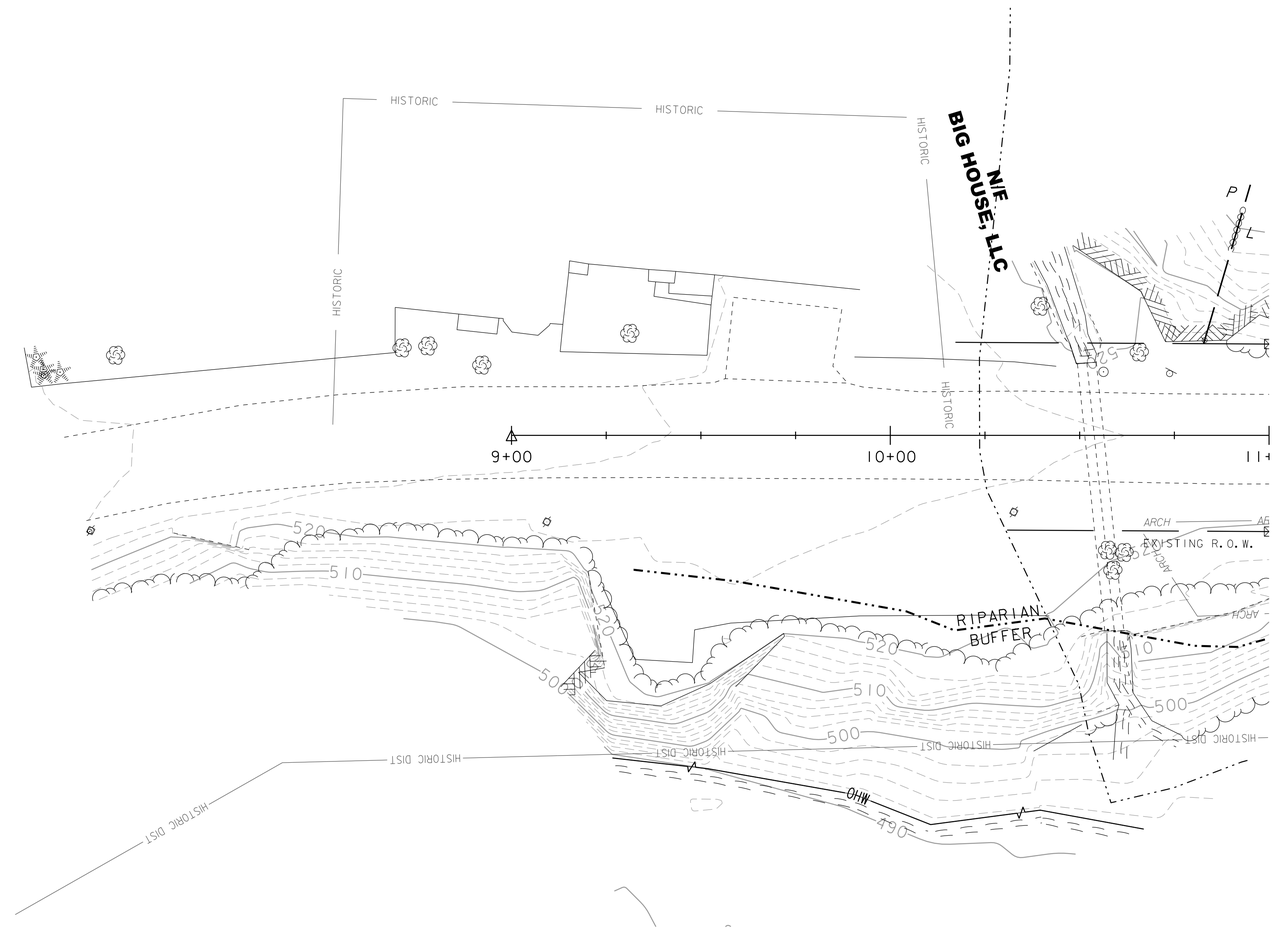

SCALE 1" = 20'-0"
20 0 20

PROJECT NAME: NEWFANE	
PROJECT NUMBER: BF 0106(6)	
FILE NAME: sl3j306bdr.dgn	PLOT DATE: 08-SEP-2020
PROJECT LEADER: C. COTA	DRAWN BY: M. LONGSTREET
DESIGNED BY: C. BURRALL	CHECKED BY: C. BURRALL
EXISTING CONDITIONS 2	SHEET 14 OF 64

REMOVAL AND DISPOSAL OF GUARDRAIL
DOVER STA 11+33.57 RT - 12+00.08 RT
GRIMES STA 12+16.74 RT - 12+53.32 RT
DEPOT STA 51+46.85 RT - 51+56.25 RT
DEPOT STA 51+46.97 LT - 51+99.89 LT

GUARDRAIL APPROACH SECTION TO CONCRETE COMBINATION BRIDGE RAILING, TL-3
DOVER STA 11+83.97 RT - 11+94.88 RT
GRIMES STA 12+21.98 RT - 12+28.30 RT
DEPOT STA 51+46.00 RT - 51+55.87 RT
DEPOT STA 51+46.00 LT - 51+65.24 LT

BRIDGE RAILING, (INCIDENTAL TO ARCH SEE BRIDGE RAIL DETAIL SHEETS)
DEPOT STA 50+31.11 LT - 51+46.00 LT
DEPOT STA 50+26.42 RT - 51+46.00 RT

HD STEEL BEAM GUARDRAIL, GALVANIZED
DOVER STA 11+35.89 RT - 11+83.97 RT
GRIMES STA 12+28.30 RT - 12+53.32 RT
DEPOT STA 51+52.68 RT - 51+55.87 RT
DEPOT STA 51+65.24 LT - 52+10.32 LT

CONSTRUCT DRIVE (AGGREGATE SURFACE)
DEPOT STA 51+52.42 RT - 51+74.80 RT

COARSE-MILLING, BITUMINOUS PAVEMENT
DOVER STA 9+00.00 - 11+25.00
GRIMES STA 12+75.00 - 14+00.00
DEPOT STA 52+50.00 - 53+00.00

REMOVE AND RESET MAILBOX, SINGLE SUPPORT
DEPOT STA 51+81.77 - 13.00' RT

CONSTRUCT PAVED APRON
DOVER STA 12+12.0 LT (7' W×45' L)
DEPOT STA 51+65.0 RT (2' W×20' L)

PRECAST REINFORCED CONCRETE DROP INLET WITH CAST IRON GRATE
DEPOT STA 51+50.00 11.75' LT & RT
GRIMES STA 12+58.00 LT

CONSTRUCT GRASS LINED DITCH
GRIMES STA 12+59.00 - 12+75.00 LT

ANCHOR FOR STEEL BEAM RAIL
DOVER STA 11+47.14 RT
DEPOT STA 51+98.20 LT

REINFORCED SOIL SLOPE
DEPOT STA 51+42.87 - 51+78.40 LT

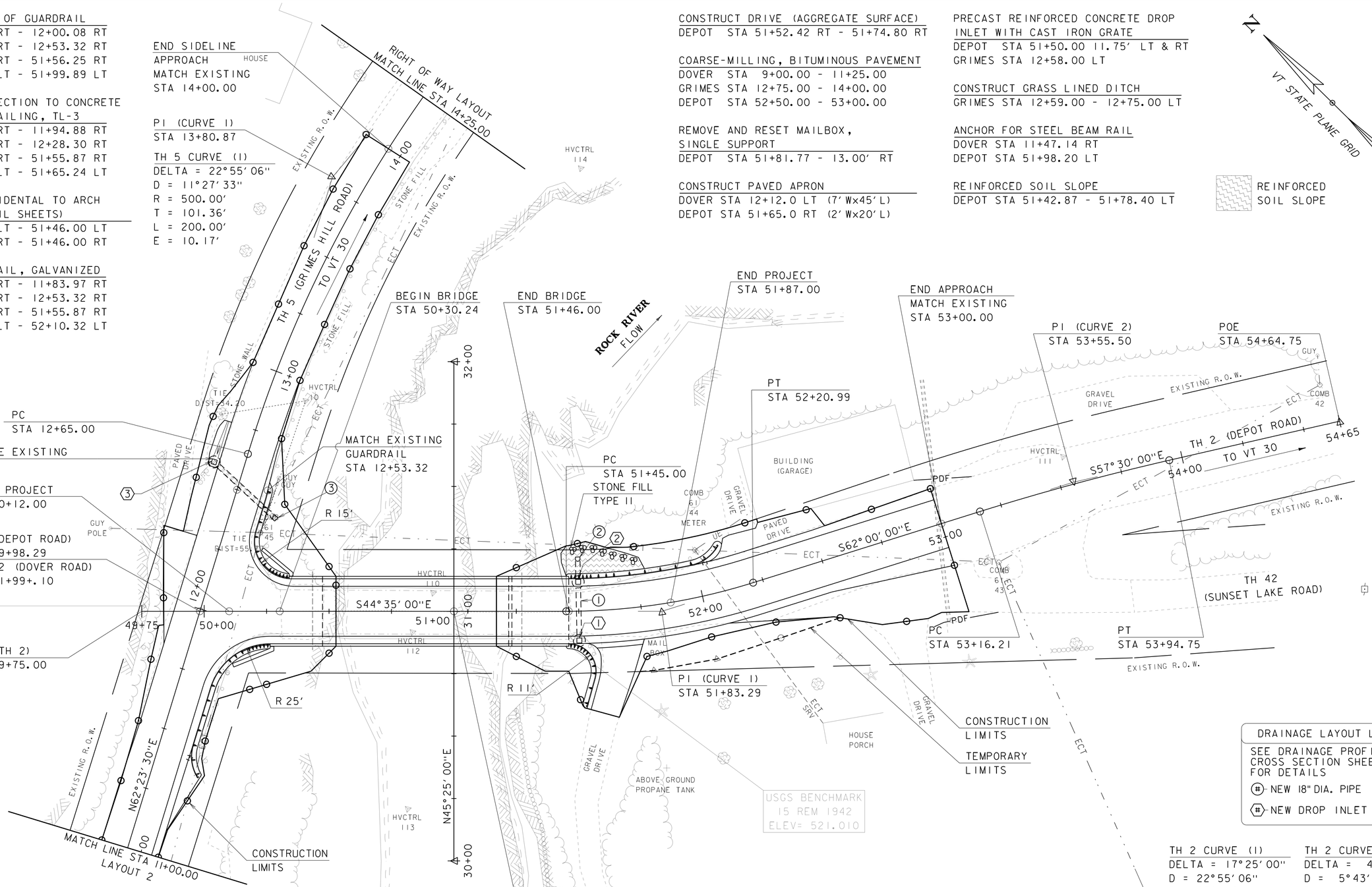

TH 2 CURVE (1)	TH 2 CURVE (2)
DELTA = 17°25'00"	DELTA = 4°30'00"
D = 22°55'06"	D = 5°43'46"
R = 250.00'	R = 1000.00'
T = 38.29'	T = 39.29'
L = 75.99'	L = 78.54'
E = 2.92'	E = 0.77'

PROJECT NAME: NEWFANE
PROJECT NUMBER: BF 0106(6)

FILE NAME: s13j306bdr.dgn
PROJECT LEADER: C. COTA
DESIGNED BY: C. BURRALL
LAYOUT 1
PLOT DATE: 08-SEP-2020
DRAWN BY: M. LONGSTREET
CHECKED BY: C. BURRALL
SHEET 15 OF 64

COARSE-MILLING, BITUMINOUS PAVEMENT
DOVER STA 9+00.00 - 11+00.00

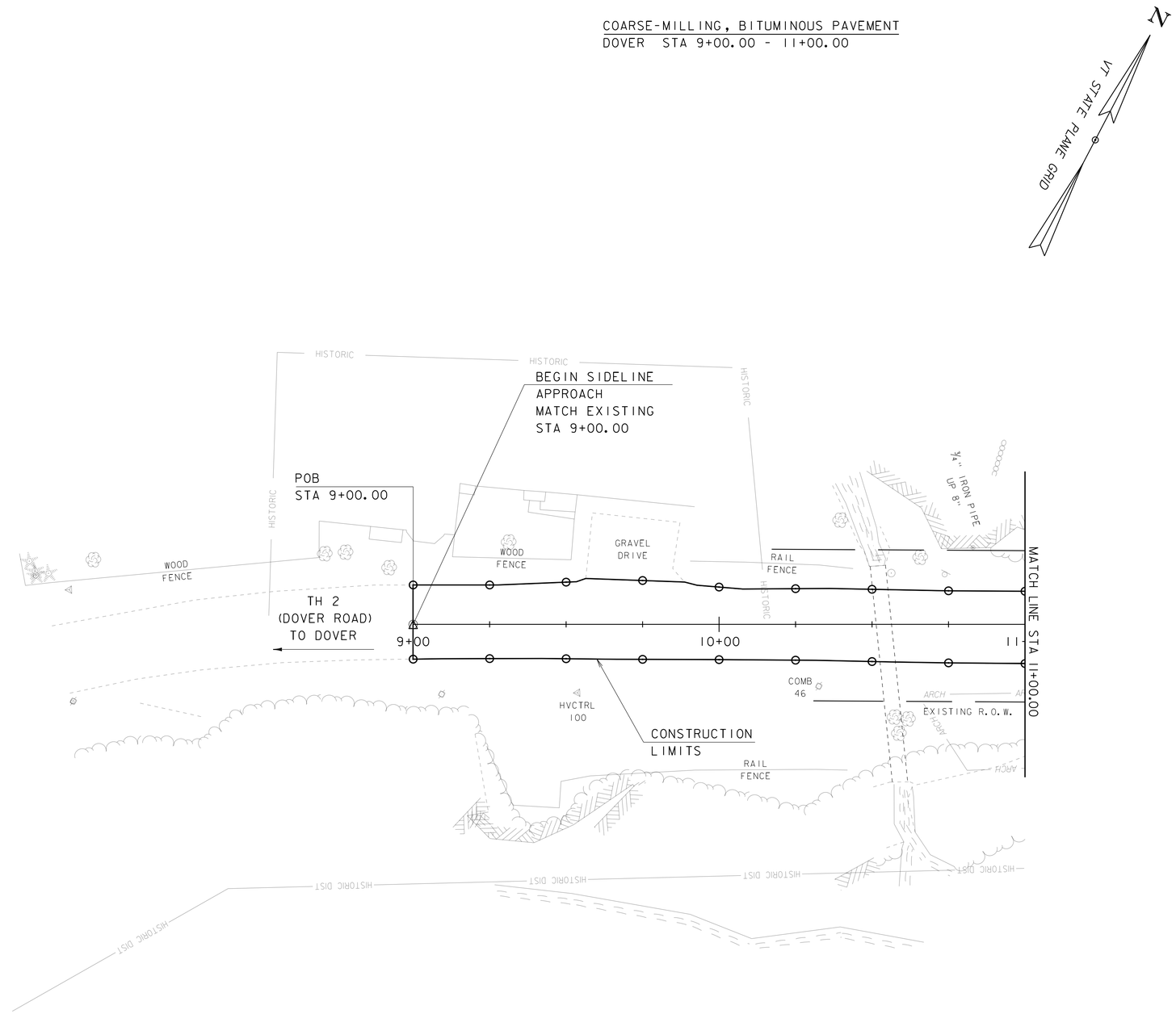

SCALE 1" = 20'-0"
20 0 20

PROJECT NAME: NEWFANE	
PROJECT NUMBER: BF 0106(6)	
FILE NAME: s13j306bdr.dgn	PLOT DATE: 08-SEP-2020
PROJECT LEADER: C. COTA	DRAWN BY: M. LONGSTREET
DESIGNED BY: C. BURRALL	CHECKED BY: C. BURRALL
LAYOUT 2	SHEET 16 OF 64

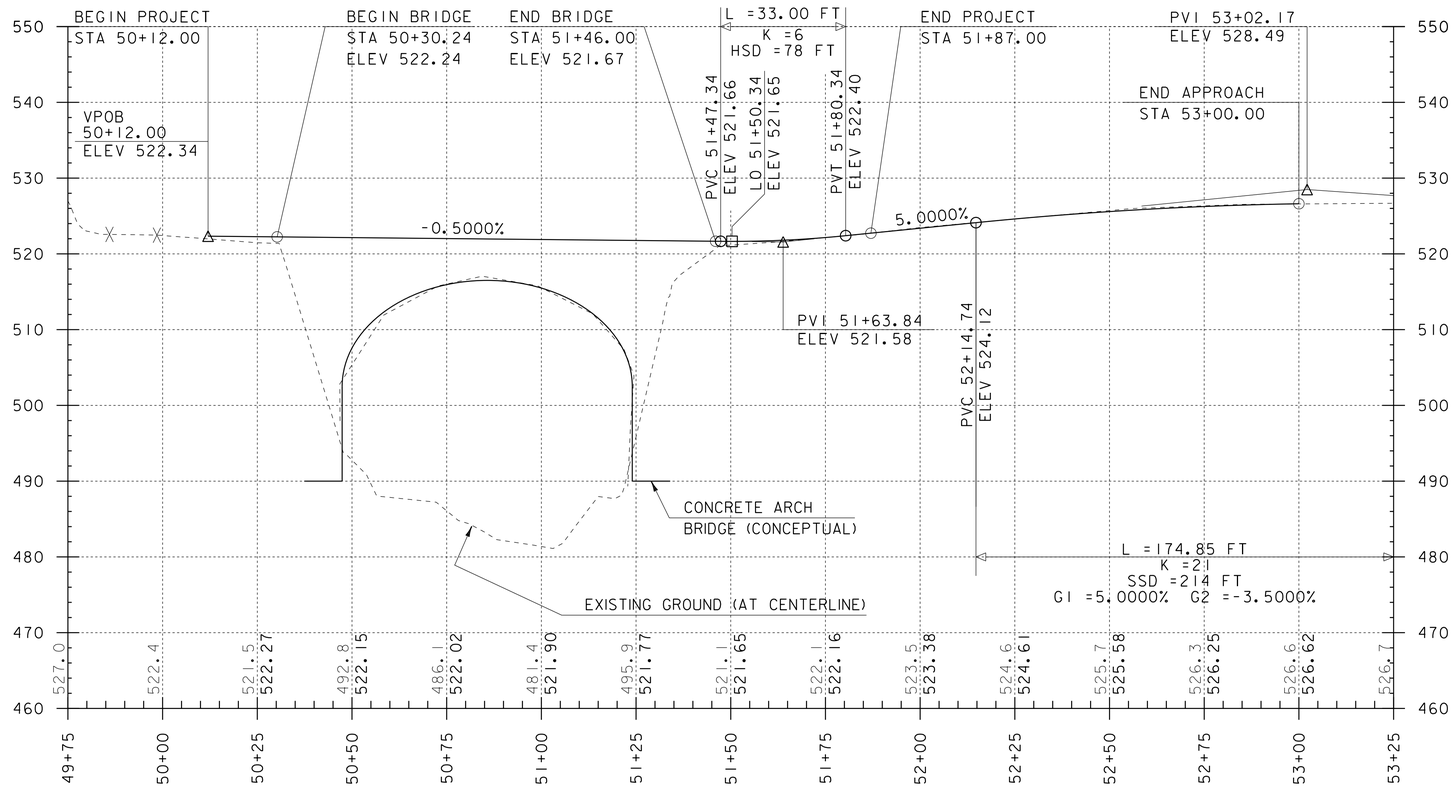

PROFILE ALONG DEPOT RD (TH 2)

HORIZONTAL SCALE: 1" = 20'-0" / VERTICAL SCALE: 1" = 10'-0"

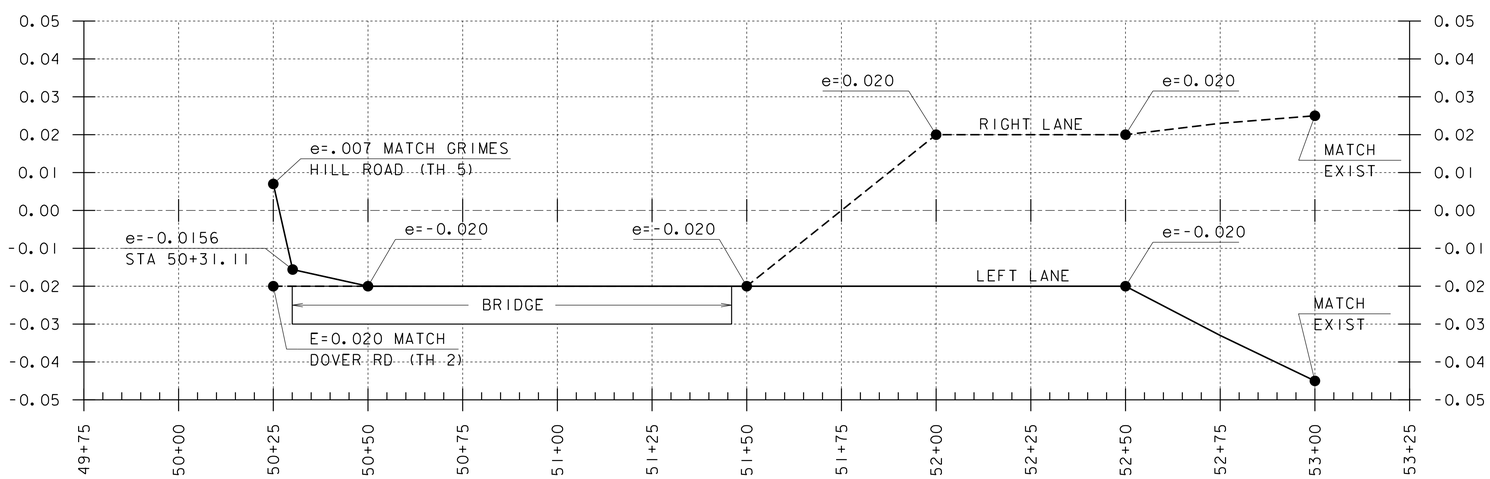

DEPOT RD (TH 2) BANKING DIAGRAM

HORIZONTAL SCALE: 1" = 20'-0" / VERTICAL SCALE: 1" = e0.020

NOTE:

ELEVATIONS SHOWN TO THE NEAREST TENTH ARE EXISTING GROUND ALONG PROPOSED CENTERLINE.

ELEVATIONS SHOWN TO THE NEAREST HUNDREDTH ARE FINISH GRADES ALONG PROPOSED CENTERLINE.

PROJECT NAME: NEWFANE	
PROJECT NUMBER: BF 0106(6)	
FILE NAME: sl3j306profile.dgn	PLOT DATE: 08-SEP-2020
PROJECT LEADER: C. COTA	DRAWN BY: M. LONGSTREET
DESIGNED BY: C. BURRALL	CHECKED BY: C. BURRALL
DEPOT RD PROFILE & BANKING DIAGRAM	SHEET 17 OF 64

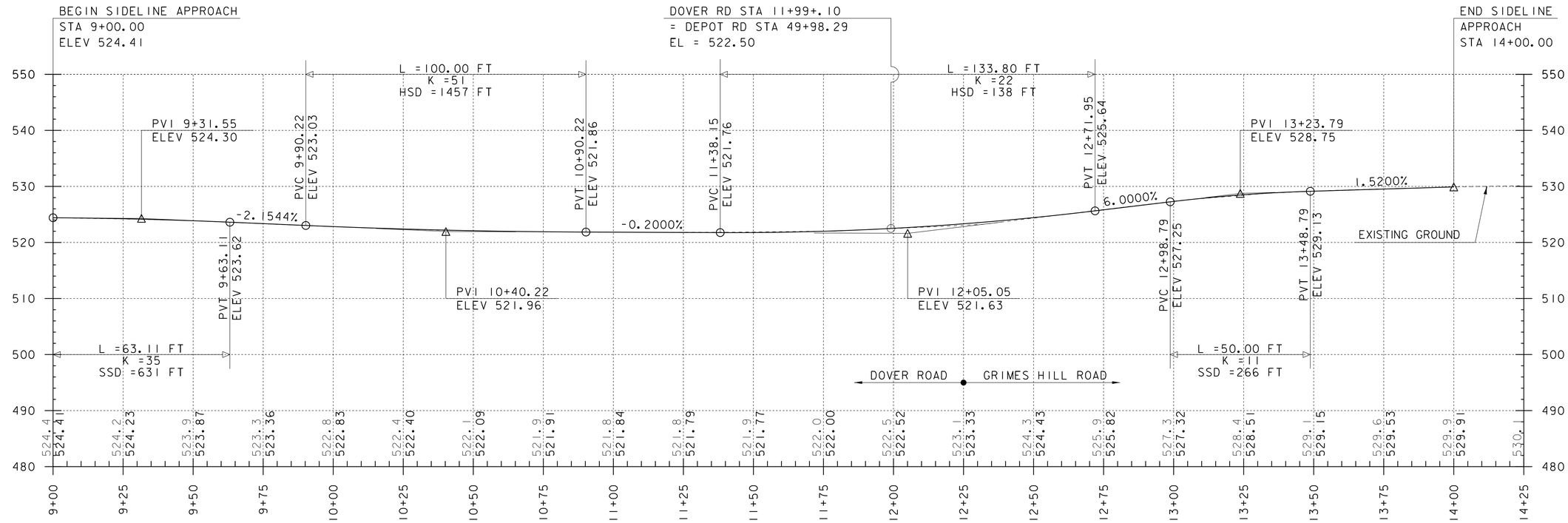

PROFILE ALONG DOVER RD (TH 2) & GRIMES HILL RD (TH 5)

HORIZONTAL SCALE: 1" = 20'-0" / VERTICAL SCALE: 1" = 10'-0"

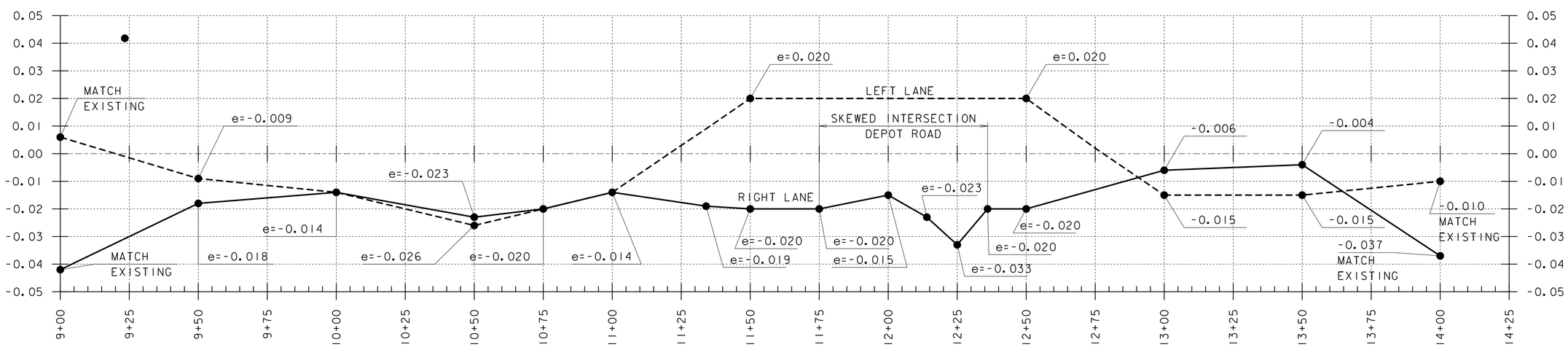

DOVER RD (TH 2) & GRIMES HILL RD (TH 5) BANKING DIAGRAM

HORIZONTAL SCALE: 1" = 20'-0" / VERTICAL SCALE: 1" = 10'-0"

NOTE:

ELEVATIONS SHOWN TO THE NEAREST TENTH ARE EXISTING GROUND ALONG PROPOSED CENTERLINE.

ELEVATIONS SHOWN TO THE NEAREST HUNDREDTH ARE FINISH GRADES ALONG PROPOSED CENTERLINE.

PROJECT NAME: NEWFANE	
PROJECT NUMBER: BF 0106(6)	
FILE NAME: sl3j306profile.dgn	PLOT DATE: 08-SEP-2020
PROJECT LEADER: C. COTA	DRAWN BY: M. LONGSTREET
DESIGNED BY: C. BURRALL	CHECKED BY: C. BURRALL
DOVER RD / GRIMES HILL RD PROFILE & BANKING	SHEET 18 OF 64

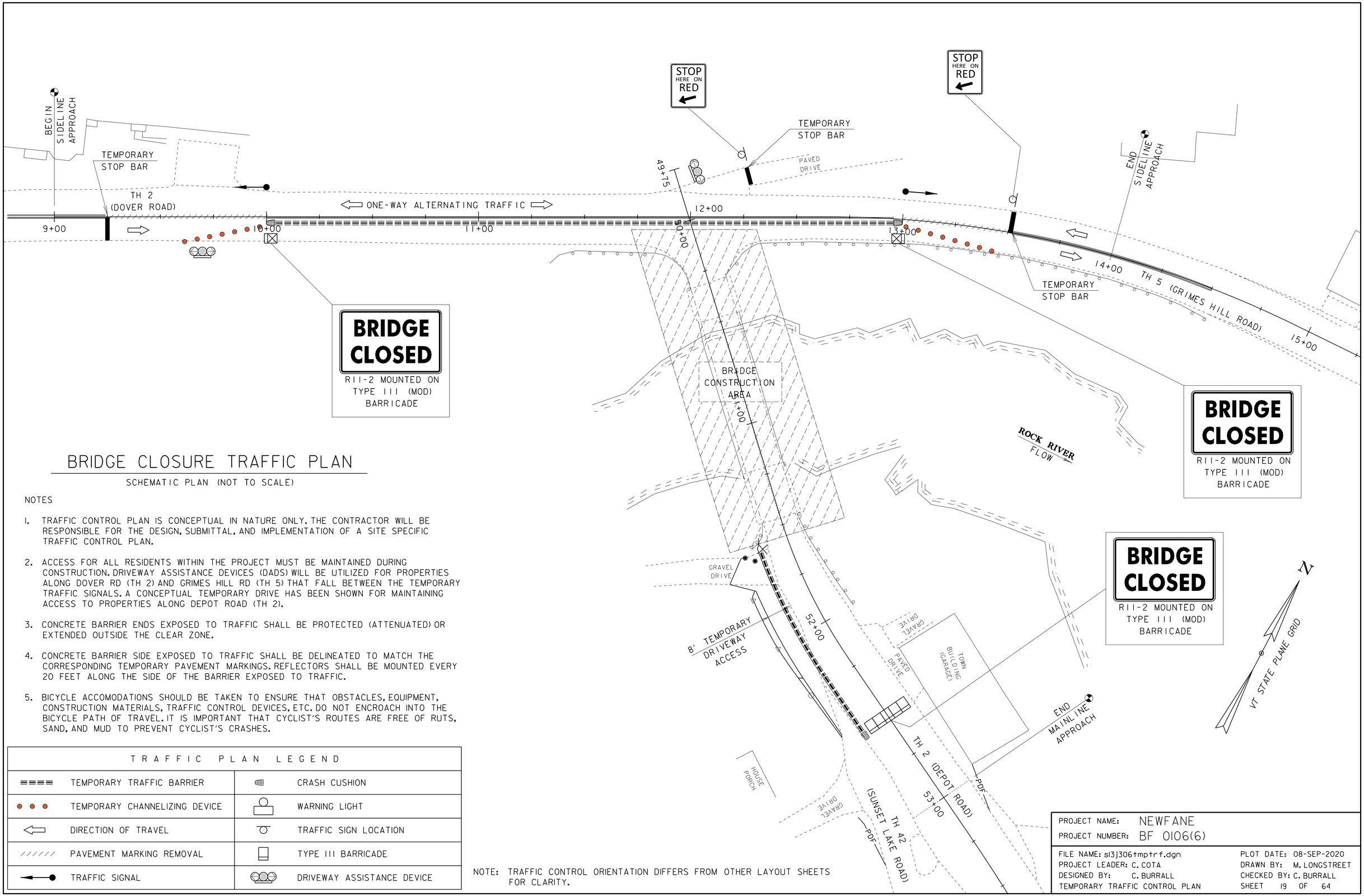

BRIDGE CLOSURE TRAFFIC PLAN

SCHEMATIC PLAN (NOT TO SCALE)

NOTES

1. TRAFFIC CONTROL PLAN IS CONCEPTUAL IN NATURE ONLY. THE CONTRACTOR WILL BE RESPONSIBLE FOR THE DESIGN, SUBMITTAL, AND IMPLEMENTATION OF A SITE SPECIFIC TRAFFIC CONTROL PLAN.
2. ACCESS FOR ALL RESIDENTS WITHIN THE PROJECT MUST BE MAINTAINED DURING CONSTRUCTION. DRIVEWAY ASSISTANCE DEVICES (DADS) WILL BE UTILIZED FOR PROPERTIES ALONG DOVER RD (TH 2) AND GRIMES HILL RD (TH 5) THAT FALL BETWEEN THE TEMPORARY TRAFFIC SIGNALS. A CONCEPTUAL TEMPORARY DRIVE HAS BEEN SHOWN FOR MAINTAINING ACCESS TO PROPERTIES ALONG DEPOT ROAD (TH 2).
3. CONCRETE BARRIER ENDS EXPOSED TO TRAFFIC SHALL BE PROTECTED (ATTENUATED) OR EXTENDED OUTSIDE THE CLEAR ZONE.
4. CONCRETE BARRIER SIDE EXPOSED TO TRAFFIC SHALL BE DELINEATED TO MATCH THE CORRESPONDING TEMPORARY PAVEMENT MARKINGS. REFLECTORS SHALL BE MOUNTED EVERY 20 FEET ALONG THE SIDE OF THE BARRIER EXPOSED TO TRAFFIC.
5. BICYCLE ACCOMODATIONS SHOULD BE TAKEN TO ENSURE THAT OBSTACLES, EQUIPMENT, CONSTRUCTION MATERIALS, TRAFFIC CONTROL DEVICES, ETC. DO NOT ENCROACH INTO THE BICYCLE PATH OF TRAVEL. IT IS IMPORTANT THAT CYCLIST'S ROUTES ARE FREE OF RUTS, SAND, AND MUD TO PREVENT CYCLIST'S CRASHES.

TRAFFIC PLAN LEGEND			
▬▬▬▬	TEMPORARY TRAFFIC BARRIER		CRASH CUSHION
● ● ●	TEMPORARY CHANNELIZING DEVICE		WARNING LIGHT
⇦	DIRECTION OF TRAVEL		TRAFFIC SIGN LOCATION
//////	PAVEMENT MARKING REMOVAL		TYPE III BARRICADE
←●	TRAFFIC SIGNAL		DRIVEWAY ASSISTANCE DEVICE

NOTE: TRAFFIC CONTROL ORIENTATION DIFFERS FROM OTHER LAYOUT SHEETS FOR CLARITY.

PROJECT NAME: NEWFANE
PROJECT NUMBER: BF 0106(6)

FILE NAME: s13j306tmptrf.dgn
PROJECT LEADER: C. COTA
DESIGNED BY: C. BURRALL
TEMPORARY TRAFFIC CONTROL PLAN

PLOT DATE: 08-SEP-2020
DRAWN BY: M. LONGSTREET
CHECKED BY: C. BURRALL
SHEET 19 OF 64

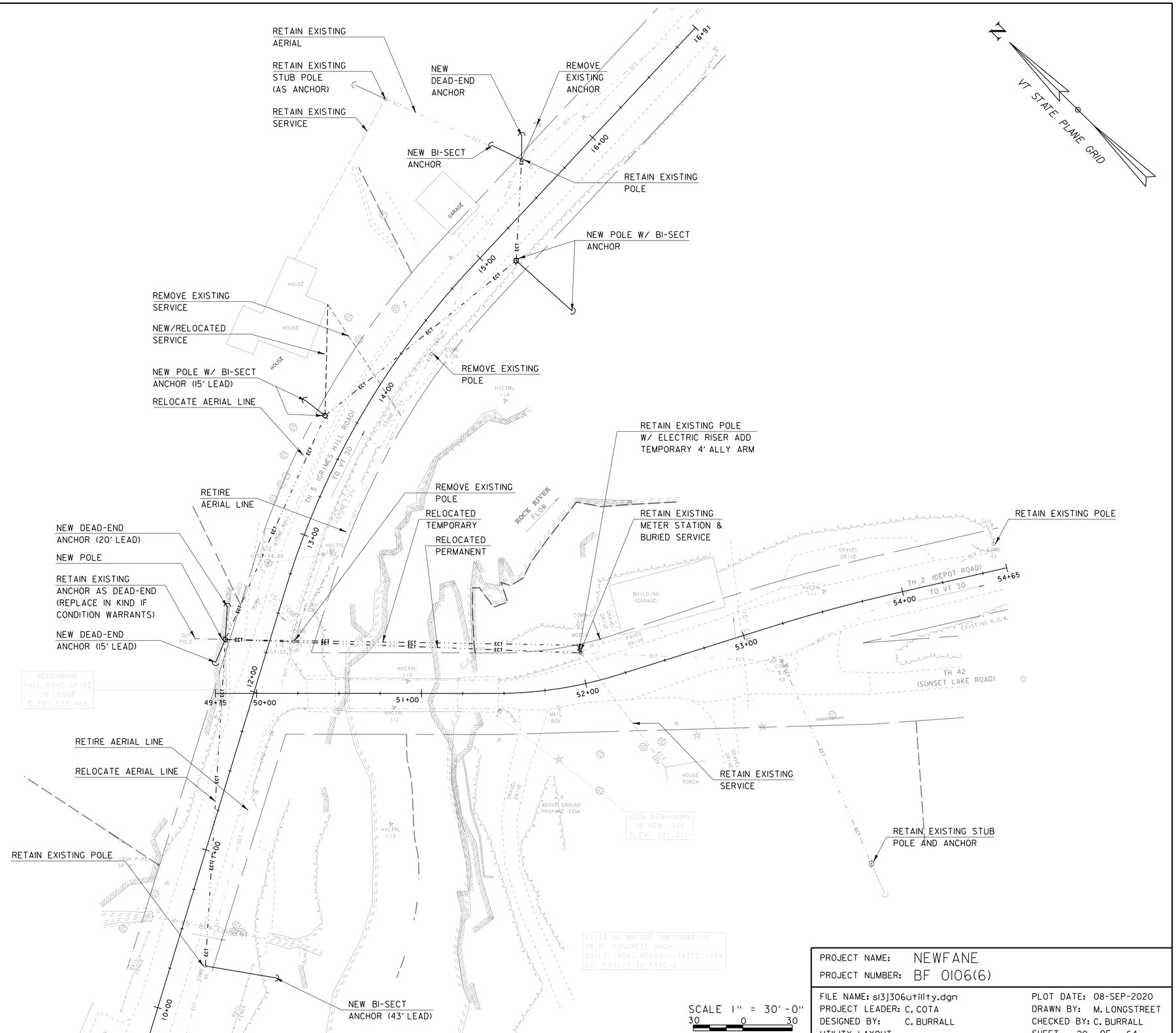

PROJECT NAME: NEWFANE	
PROJECT NUMBER: BF 0106(6)	
FILE NAME: sl3j306utility.dgn	PLOT DATE: 08-SEP-2020
PROJECT LEADER: C. COTA	DRAWN BY: M. LONGSTREET
DESIGNED BY: C. BURRALL	CHECKED BY: C. BURRALL
UTILITY LAYOUT	SHEET 20 OF 64

DURABLE 4" YELLOW LINE, POLYUREA (DOUBLE CL)
DOVER STA 9+00.00 - 11+71.00 CL
GRIMES STA 12+35.00 - 14+00.00 CL
DEPOT STA 52+00.00 - 53+00.00 CL

DURABLE 4" WHITE LINE, POLYUREA (HATCH BRIDGE SHOULDERS AS DIMENSIONED ON PLAN)
DEPOT STA 50+04.3 RT - 51+56.2 RT
DEPOT STA 50+19.3 LT - 51+56.2 LT

DURABLE LETTER OR SYMBOL, POLYUREA (12"x18" YIELD SYMBOL (6))
DEPOT STA 52+00.0 LT

DURABLE 24" STOP BAR, POLYUREA
GRIMES STA 12+36.00 LT
DOVER STA 11+71.00 RT

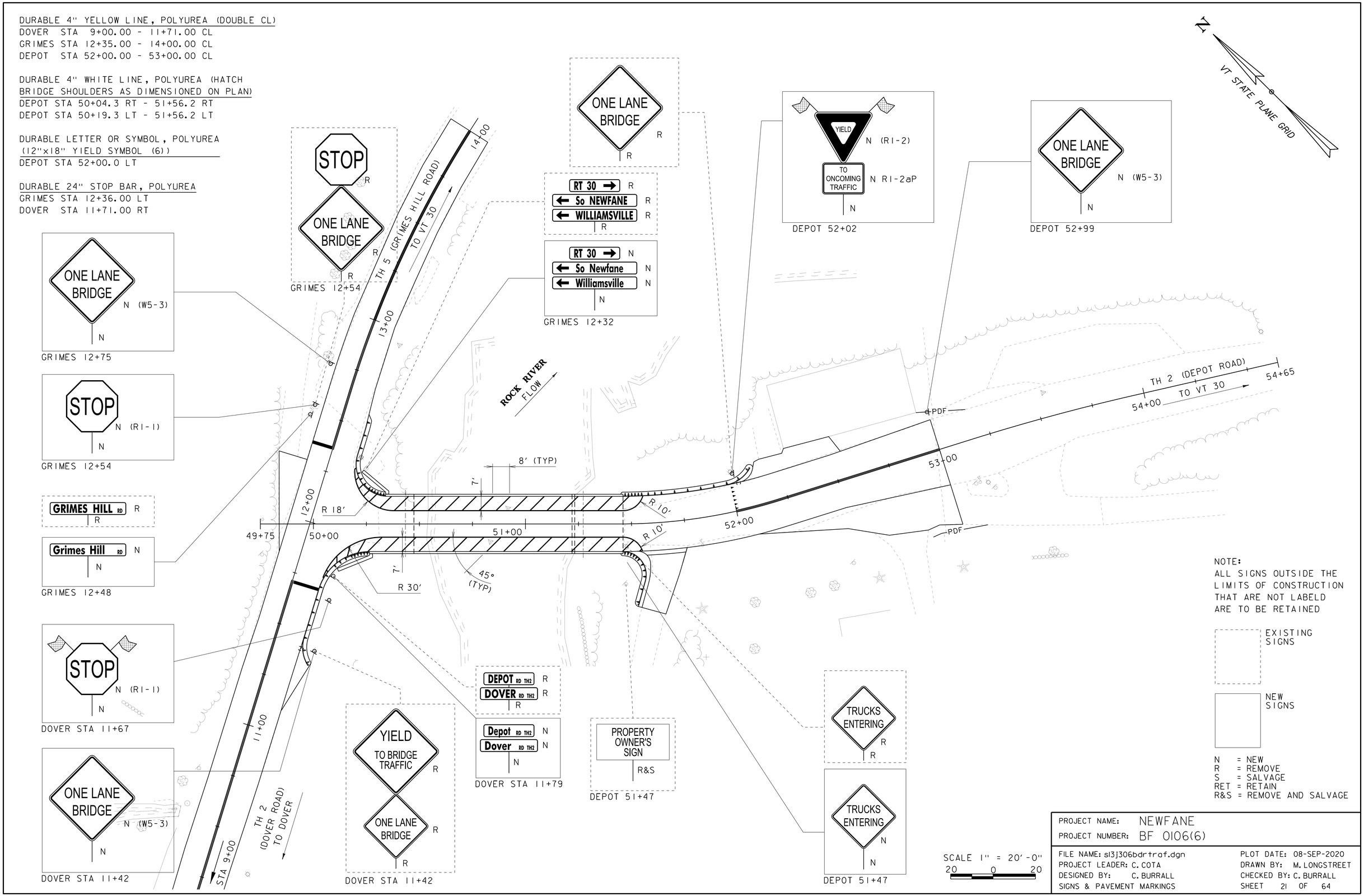

NOTE:
ALL SIGNS OUTSIDE THE LIMITS OF CONSTRUCTION THAT ARE NOT LABELD ARE TO BE RETAINED

EXISTING SIGNS

NEW SIGNS

N = NEW
R = REMOVE
S = SALVAGE
RET = RETAIN
R&S = REMOVE AND SALVAGE

PROJECT NAME: NEWFANE	
PROJECT NUMBER: BF 0106(6)	
FILE NAME: sl3j306bdrtraf.dgn	PLOT DATE: 08-SEP-2020
PROJECT LEADER: C. COTA	DRAWN BY: M. LONGSTREET
DESIGNED BY: C. BURRALL	CHECKED BY: C. BURRALL
SIGNS & PAVEMENT MARKINGS	SHEET 21 OF 64

STATE OF VERMONT
AGENCY OF TRANSPORTATION

TRAFFIC SIGN SUMMARY SHEET

MILE MARKER, STATION OR SIGN NUMBER	SIGN LEGEND	SIGN DIMENSIONS EACH	SIGN DIMENSIONS WIDTH (in)	SIGN DIMENSIONS HEIGHT (in)	NEW & SALVAGED SIGNS "A"	NEW & SALVAGED SIGNS "B"	NEW & SALVAGED SIGNS SALV SIGN	NEW & SALVAGED SIGNS SALV TIS	EXIST POST RETAIN	EXIST POST SALVAGE	NEW SIGN POSTS NO. OF POST	FLANGED CHANNEL (LB / FT) 1.12	FLANGED CHANNEL (LB / FT) 2.00	FLANGED CHANNEL (LB / FT) 3.00	SQUARE STEEL (in) (LB / FT) 1.75	SQUARE STEEL (in) (LB / FT) 2.00	SQUARE STEEL (in) (LB / FT) 2.50	ANCHOR	SLEEVE	TUBULAR ALUMINUM Ø (IN) (LB / FT) 3.00	TUBULAR ALUMINUM Ø (IN) (LB / FT) 4.00	TUBULAR ALUMINUM Ø (IN) (LB / FT) 4.0 MOD	FOUNDATION	TUBULAR STEEL Ø (IN) (LB / FT) 3.00	TUBULAR STEEL Ø (IN) (LB / FT) 3.50	TUBULAR STEEL Ø (IN) (LB / FT) 4.00	TUBULAR STEEL Ø (IN) (LB / FT) 5.00	W-SHAPE STEEL FTG. SIZE 24"	W-SHAPE STEEL FTG. SIZE 30"	W-SHAPE STEEL WEIGHT	W-SHAPE STEEL POST SIZE	W-SHAPE STEEL SIGN FRAME REQUIRED	REMARKS / SHSM - SIGN DESIGNATION	SIGN DETAIL DETAIL ON SHEET NUMBER	SIGN DETAIL STANDARD SHEET NUMBER
OPTION ITEMS																																			
11+42		1	36.0	36.0	9.00						1.0					14.0		X														W5-3		SHSM
11+67		1	30.0	30.0	6.25						1.0					14.0		X														R1-1 (WITH FLAGS)		SHSM
12+48		1	36.0	8.0	2.00						1.0					14.0		X														D3-1		SHSM
12+54		1	30.0	30.0	6.25						1.0					14.0		X														R1-1		SHSM
12+75		1	36.0	36.0	9.00						1.0					14.0		X														W5-3		SHSM
11+79	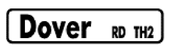	1	24.0	8.0	1.33						1.0					14.0		X														D3-1		SHSM
11+79	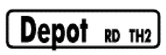	1	24.0	8.0	1.33																											D3-1		SHSM
12+32		1	72.0	12.0	6.00						1.0					14.0		X														VD1-1		T-93
12+32		1	72.0	12.0	6.00																											VD1-1		T-93
12+32	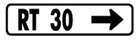	1	24.0	12.0	2.00																											D3-1		SHSM
51+47							X			X																						RETAIN EXISTING SIGN (REMOVE AND RESET)		
51+47		1	36.0	30.0	36.00						1.0					14.0		X														VW-202		T-81
52+02		1	36.0	36.0	9.00						1.0					14.0		X														R1-2 (WITH FLAGS)		SHSM
52+02		1	24.0	18.0	3.00																											R1-2a		SHSM
52+99		1	36.0	36.0	9.00						1.0					14.0		X														W5-3		SHSM
												FT .	FT .	FT .	FT .	FT 140.	FT .	XXXXX	EA .	LB .	LB .	LB .		LB .	LB .	LB .	LB .								
		TOTALS			SF 106.17	SF .	EA. .	SF .	16			FT .			FT 140.					LB .			EA.	LB .				EA. .	EA. .	LB .					

FINAL POST LENGTHS ARE TO BE DETERMINED IN THE FIELD. POST SIZES ARE COMPUTED BASED ON INFORMATION FURNISHED ON THE STANDARD SHEETS AND THE VTRANS "SIGN POST DESIGN GUIDELINE."

PROJECT NAME: NEWFANE
PROJECT NUMBER: BF 0106(6)

FILE NAME: sl3j306bdrtraf.dgn
PROJECT LEADER: C. COTA
DESIGNED BY: C. BURRALL
TRAFFIC SIGN SUMMARY

PLOT DATE: 08-SEP-2020
DRAWN BY: C. BURRALL
CHECKED BY: M. LONGSTREET
SHEET 22 OF 64

SOIL CLASSIFICATION

AASHTO

A1	Gravel and Sand
A3	Fine Sand
A2	Silty or Clayey Gravel and Sand
A4	Silty Soil - Low Compressibility
A5	Silty Soil - Highly Compressible
A6	Clayey Soil - Low Compressibility
A7	Clayey Soil - Highly Compressible

ROCK QUALITY DESIGNATION

R.Q.D. (%)	ROCK DESCRIPTION
<25	Very Poor
25 to 50	Poor
51 to 75	Fair
76 to 90	Good
>90	Excellent

SHEAR STRENGTH

UNDRAINED SHEAR STRENGTH IN P.S.F.	CONSISTENCY
<250	Very Soft
250-500	Soft
500-1000	Med. Stiff
1000-2000	Stiff
2000-4000	Very Stiff
>4000	Hard

CORRELATION GUIDE OF "N" TO DENSITY/CONSISTENCY

DENSITY (GRANULAR SOILS)

N	DESCRIPTIVE TERM
<5	Very Loose
5-10	Loose
11-24	Med. Dense
25-50	Dense
>50	Very Dense

CONSISTENCY (COHESIVE SOILS)

N	DESCRIPTIVE TERM
<2	Very Soft
2-4	Soft
5-8	Med. Stiff
9-15	Stiff
16-30	Very Stiff
31-60	Hard
>60	Very Hard

COMMONLY USED SYMBOLS

▼	Water Elevation
⊗	Standard Penetration Boring
⊕	Auger Boring
⊙	Rod Sounding
S	Sample
N	Standard Penetration Test Blow Count Per Foot For: 2" O.D. Sampler 1 3/8" I.D. Sampler Hammer Weight Of 140 Lbs. Hammer Fall Of 30"
VS	Field Vane Shear Test
US	Undisturbed Soil Sample
B	Blast
DC	Diamond Core
MD	Mud Drill
WA	Wash Ahead
HSA	Hollow Stem Auger
AX	Core Size 1 1/8"
BX	Core Size 1 5/8"
NX	Core Size 2 1/8"
M	Double Tube Core Barrel Used
LL	Liquid Limit
PL	Plastic Limit
PI	Plasticity Index
NP	Non Plastic
w	Moisture Content (Dry Wgt. Basis)
D	Dry
M	Moist
MTW	Moist To Wet
W	Wet
Sat	Saturated
Bo	Boulder
Gr	Gravel
Sa	Sand
Si	Silt
Cl	Clay
HP	Hardpan
Le	Ledge
NLTD	No Ledge To Depth
CNPF	Can Not Penetrate Further
TLOB	Top of Ledge Or Boulder
NR	No Recovery
Rec.	Recovery
%Rec.	Percent Recovery
RQD	Rock Quality Designation
CBR	California Bearing Ratio
<	Less Than
>	Greater Than
R	Refusal (N > 100)
VTSPG	NAD83 - See Note 7

COLOR

blk	Black	pnk	Pink
bl	Blue	pu	Purple
brn	Brown	rd	Red
dk	Dark	tn	Tan
gry	Gray	wh	White
gn	Green	yel	Yellow
lt	Light	mltc	Multicolored
or	Orange		

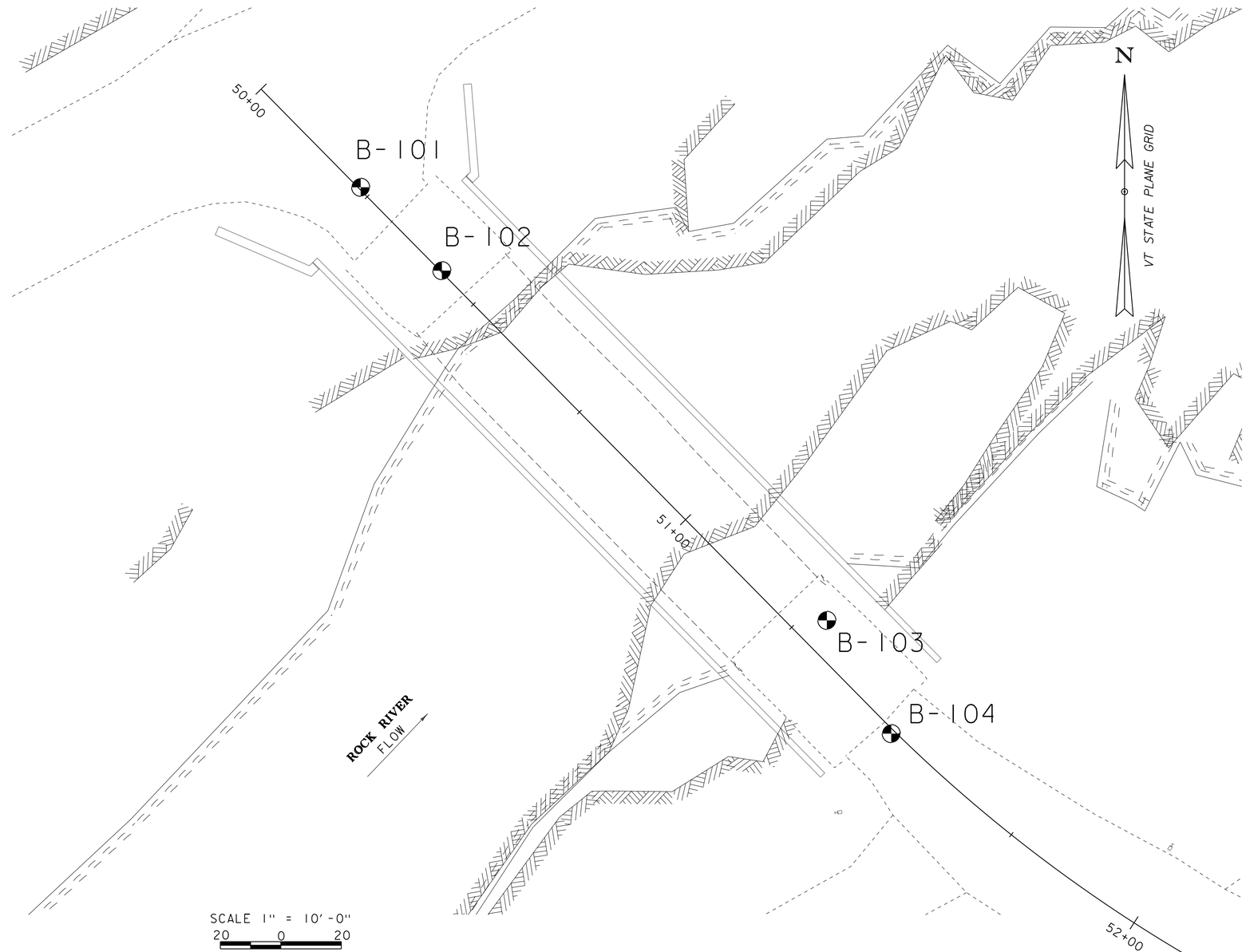

DEFINITIONS (AASHTO)

BEDROCK (LEDGE) - Rock in its native location of indefinite thickness.

BOULDER - A rock fragment with an average dimension > 12 inches.

COBBLE - Rock fragments with an average dimension between 3 and 12 inches.

GRAVEL - Rounded particles of rock < 3" and > 0.0787" (#10 sieve).

SAND - Particles of rock < 0.0787" (#10 sieve) and > 0.0029" (#200 sieve).

SILT - Soil < 0.0029" (#200 sieve), non or slightly plastic and exhibits no strength when air-dried.

CLAY - Fine grained soil, exhibits plasticity when moist and considerable strength when air-dried.

VARVED - Alternate layers of silt and clay.

HARDPAN - Extremely dense soil, cemented layer, not softened when wet.

MUCK - Soft organic soil (containing > 10% organic material.

MOISTURE CONTENT - Weight of water divided by dry weight of soil.

FLOWING SAND - Granular soil so saturated (loose) that it flows into drill casing during extraction of wash rod.

STRIKE - Angle from magnetic north to line of intersection of bed with a horizontal plane.

DIP - Inclination of bed with a horizontal plane.

GENERAL NOTES

1. The subsurface explorations shown herein were made between June 22 and June 30, 2015 by the Agency.
2. Soil and rock classifications, properties and descriptions are based on engineering interpretation from available subsurface information by the Agency and may not necessarily reflect actual variations in subsurface conditions that may be encountered between individual boring or sample locations.
3. Observed water levels and/or conditions indicated are as recorded at the time of exploration and may vary according to the prevailing rainfall, methods of exploration and other factors.
4. Engineering judgment was exercised in preparing the subsurface information presented herein. Analysis and interpretation of subsurface data was performed and interpreted for Agency design and estimating purposes. Presentation of the information in the Contract is intended to provide the Contractor access to the same data available to the Agency. The subsurface information is presented in good faith and is not intended as a substitute for personal investigation, independent interpretation, independent analysis or judgment by the Contractor.
5. Pictorial structure details shown on the boring plan layout or soils profile are for illustrative purposes only and may not accurately portray final contract details.
6. Terminology used on boring logs to describe the hardness, degree of weathering, and spacing of fractures, joints and other discontinuities in the bedrock is defined in the AASHTO Manual on Subsurface Investigations, 1988.
7. Northing and Easting coordinates are shown in Vermont State Plane Grid North American Datum 1983 in meters and survey feet.

BORING CHART

HOLE NUMBER	STATION	OFFSET	NORTHING	EASTING	ELEVATION
B-101	50+23.12	-0.33	163305.11	1593357.33	493.75
B-102	50+42.37	-0.22	163291.32	1593370.76	505.45
B-103	51+28.26	-4.96	163233.47	1593434.43	497.31
B-104	51+49.07	0.64	163214.74	1593445.08	506.02

PROJECT NAME: NEWFANE
PROJECT NUMBER: BF 0106(6)

FILE NAME: s13j306bor.dgn
PROJECT LEADER: C. COTA
DESIGNED BY: C. BURRALL
BORING INFORMATION SHEET

PLOT DATE: 08-SEP-2020
DRAWN BY: M. LONGSTREET
CHECKED BY: C. BURRALL
SHEET 23 OF 64

STATE OF VERMONT
AGENCY OF TRANSPORTATION
CONSTRUCTION AND
MATERIALS BUREAU
CENTRAL LABORATORY

BORING LOG

NEWFANE
BF 0106(6)
TH-2 BR-12

Boring No.: **B-101**
Page No.: 1 of 1
Pin No.: 13J306
Checked By: TDE

Boring Crew: JUDKINS, HOOK
Date Started: 6/24/15 Date Finished: 6/29/15
VTSPG NAD83: N 163305.11 ft E 1593357.33 ft
Station: 40+24 Offset: 0.27LT
Ground Elevation: 521.55 ft

	Casing	Sampler
Type:	WB	SS
I.D.:	4 in	1.5 in
Hammer Wt:	N.A.	140 lb.
Hammer Fall:	N.A.	30 in.
Hammer/Rod Type:	Auto/AWJ	
Rig:	CME 55 TRACK	C_e = 1.46

Groundwater Observations

Date	Depth (ft)	Notes

TOP OF WW2
EL=515.5

TOP OF WW1
EL=506.00

TOP OF
ABUTMENT 1
EL=502.00

TOP OF
BEDROCK
EL=493.75

Depth (ft)	Strata (1)	CLASSIFICATION OF MATERIALS (Description)	Run (Dip deg.)	Core Rec. % (RQD %)	Drill Rate minutes/ft	Blows/6" (N Value)	Moisture Content %	Gravel %	Sand %	Fines %
		Asphalt Pavement, 0.0 ft - 0.75 ft								
		A-1-b, GrSa, brn, Moist, Rec. = 1.1 ft				15-22-12-8 (34)	9.0	36.6	47.4	16.0
		Field Note:, Cleaned out with roller cone								
5		Visual Description:, Broken Rock with sand, red-brn, MTW, Rec. = 0.3 ft				2-2-2-5 (4)	9.6			
		Field Note:, NXDC, Cleaned out casing. Appears to be Concrete and Broken Rock								
10		A-1-a, SaGr, Lt/gry, Moist, Rec. = 0.7 ft				19-35-R@0.0" (R)	11.5	44.4	40.5	15.1
		Field Note:, NXDC, Cleaned out casing. Appears to be Concrete and Broken Rock								
15		Field Note:, Appears to be Concrete & Broken Rock				R@1.0" (R)				
		Field Note:, NXDC, Cleaned out casing. Appears to be Concrete and Broken Rock								
20		Field Note:, No Movement				R@1.0" (R)				
		Field Note:, Cleaned out casing, NXDC								
25		22.8 ft - 27.8 ft, Fill & Concrete. NXMDC	1	20	3 3 3 1 3					
30		27.8 ft - 32.8 ft, Dark gray, To black porphyritic AMPHIBOLITE, with rust staining on joints. Hard, Very slightly weathered, Poor rock, NXMDC, RMR = 22	2 (75)	20 (0)	2 9 6 8 5	Top of Bedrock @ 27.8 ft				
35		32.8 ft - 37.8 ft, Dark gray, To black porphyritic AMPHIBOLITE, with rust staining on joints. Hard, Very slightly weathered, Fair rock, NXMDC, RMR = 43	3 (75)	96 (71)	2 3 3 2 2					
		Hole stopped @ 37.8 ft								

Notes:
1. Stratification lines represent approximate boundary between material types. Transition may be gradual.
2. N Values have not been corrected for hammer energy. C is the hammer energy correction factor.
3. Water level readings have been made at times and under conditions stated. Fluctuations may occur due to other factors than those present at the time measurements were made.

BORING LOG 2 NEWFANE BF 0106(6).GPJ VERMONT AOT.GDT 7/30/15

STATE OF VERMONT
AGENCY OF TRANSPORTATION
CONSTRUCTION AND
MATERIALS BUREAU
CENTRAL LABORATORY

BORING LOG

NEWFANE
BF 0106(6)
TH-2 BR-12

Boring No.: **B-102**
Page No.: 1 of 1
Pin No.: 13J306
Checked By: TDE

Boring Crew: JUDKINS, HOOK
Date Started: 6/25/15 Date Finished: 6/29/15
VTSPG NAD83: N 163291.32 ft E 1593370.76 ft
Station: 40+44 Offset: 0.23LT
Ground Elevation: 521.45 ft

	Casing	Sampler
Type:	WB	SS
I.D.:	4 in	1.5 in
Hammer Wt:	N.A.	140 lb.
Hammer Fall:	N.A.	30 in.
Hammer/Rod Type:	Auto/AWJ	
Rig:	CME 55 TRACK	C_e = 1.46

Groundwater Observations

Date	Depth (ft)	Notes

TOP OF WW2
EL=515.5

TOP OF WW1
EL=506.00

TOP OF
BEDROCK
EL=505.45

TOP OF
ABUTMENT 1
EL=502.00

Depth (ft)	Strata (1)	CLASSIFICATION OF MATERIALS (Description)	Run (Dip deg.)	Core Rec. % (RQD %)	Drill Rate minutes/ft	Blows/6" (N Value)	Moisture Content %	Gravel %	Sand %	Fines %
		Asphalt Pavement, 0.0 ft - 0.52 ft								
		A-1-b, GrSa, orange-brn, Moist, Rec. = 1.7 ft				30-20-18-12 (38)	6.9	45.5	40.8	13.7
		Field Note:, NXDC, Cleaned out casing								
5		Field Note:, No Recovery, Appears to be gravelly sand				6-3-2-2 (5)				
		Field Note:, NXDC, Cleaned out casing								
10		Visual Description:, Broken Rock with sand, blk-brn, Moist, Rec. = 0.2 ft				R@2.5" (R)	8.7			
		Field Note:, NXDC, Cleaned out casing. Appears to be weathered rock								
15		Visual Description:, Broken Rock with sand, gry-brn, Moist, Rec. = 0.2 ft				R@2.5" (R)	11.7			
		Field Note:, NXDC, Cleaned out casing								
20		16.0 ft - 21.0 ft, Light gray, Strongly foliated amphibole-mica-SCHIST, with rust staining on joints. Medium hard, Moderately weathered, Poor rock, NXMDC, RMR = 22	1 (70)	34 (0)	2 2 3 3 3	Top of Bedrock @ 16.0 ft				
25		21.0 ft - 21.6 ft, Tan, Strongly foliated amphibole-mica-SCHIST, with rust on joints. Medium hard, Moderately weathered 21.6 ft - 22.8 ft, Light gray, Strongly foliated amphibole-mica-SCHIST, with rust on joints. Hard, Slightly weathered 22.8 ft - 26.0 ft, Dark gray, Porphyritic AMPHIBOLITE, with rust on joints. Hard, Very slightly weathered, Poor rock, NXMDC, RMR = 36	2 (70-75)	98 (37)	2 2 3 3 3					
		Hole stopped @ 26.0 ft								
		Remarks: Hole collapsed at 14.0 ft.								

Notes:
1. Stratification lines represent approximate boundary between material types. Transition may be gradual.
2. N Values have not been corrected for hammer energy. C is the hammer energy correction factor.
3. Water level readings have been made at times and under conditions stated. Fluctuations may occur due to other factors than those present at the time measurements were made.

BORING LOG 2 NEWFANE BF 0106(6).GPJ VERMONT AOT.GDT 7/30/15

PROJECT NAME: NEWFANE
PROJECT NUMBER: BF 0106(6)

FILE NAME: sl3j306bor.dgn
PROJECT LEADER: C. COTA
DESIGNED BY: C. BURRALL
BORING LOGS SHEET 1

PLOT DATE: 08-SEP-2020
DRAWN BY: M. LONGSTREET
CHECKED BY: C. BURRALL
SHEET 24 OF 64

STATE OF VERMONT
AGENCY OF TRANSPORTATION
CONSTRUCTION AND
MATERIALS BUREAU
CENTRAL LABORATORY

BORING LOG

NEWFANE
BF 0106(6)
TH-2 BR-12

Boring No.: **B-103**
Page No.: 1 of 1
Pin No.: 13J306
Checked By: TDE

Boring Crew: JUDKINS, HOOK
Date Started: 6/22/15 Date Finished: 6/25/15
VTSPG NAD83: N 163233.47 ft E 1593434.43 ft
Station: 41+25 Offset: 5.29LT
Ground Elevation: 521.01 ft

	Casing	Sampler
Type:	WB	SS
I.D.:	4 in	1.5 in
Hammer Wt:	N.A.	140 lb.
Hammer Fall:	N.A.	30 in.
Hammer/Rod Type:	Auto/AWJ	
Rig:	CME 55 TRACK	C_E = 1.46

Groundwater Observations

Date	Depth (ft)	Notes

Depth (ft)	Strata (1)	CLASSIFICATION OF MATERIALS (Description)	Run (Dip deg.)	Core Rec. % (RQD %)	Drill Rate minutes/ft	Blows/6" (N Value)	Moisture Content %	Gravel %	Sand %	Fines %
		Asphalt Pavement, 0.0 ft - 0.68 ft								
		A-1-b, GrSa, brn, Moist, Rec. = 1.2 ft				12-10-22-9 (32)	7.4	43.7	44.4	11.9
		Field Note:, NXDC, Cleaned out casing								
5		Visual Description:, Broken Rock (washed), orange-brn, Moist, Rec. = 0.4 ft				5-1-2-1 (3)	5.5			
		Field Note:, Cleaned out casing, NXDC								
10		Visual Description:, Concrete & Broken Rock pieces, gry, Moist, Rec. = 0.1 ft				R@1.0" (R)				
		11.2 ft - 16.2 ft, Concrete, steel, and rock fill. NXMDC	1	82	5 2 2 5 5					
15		16.2 ft - 16.8 ft, Rock fill. NXMDC 16.8 ft - 18.2 ft, Concrete	2	100	3 3					
		18.2 ft - 19.3 ft, Rock fill			4					
20		19.3 ft - 19.6 ft, Concrete 19.6 ft - 21.2 ft, Rock fill			3 5					
		21.2 ft - 22.1 ft, Concrete & Rock								
25		22.1 ft - 23.7 ft, Concrete filled joints and rock NXMDC 23.7 ft - 27.1 ft, Gray, AMPHIBOLITE, with 80-85 degree dipping joints that have rust and purple staining along surface. Hard, Slightly weathered, Poor rock, RMR = 22	3 (-)	100 (0)	2 2 2 2 2	Top of Bedrock @ 23.7 ft				
30		Hole stopped @ 27.1 ft Remarks: Concrete was encountered at 9.3 ft.								

TOP OF ABUTMENT 2 EL=502.00

TOP OF BEDROCK EL=497.31

Notes:
1. Stratification lines represent approximate boundary between material types. Transition may be gradual.
2. N Values have not been corrected for hammer energy. C is the hammer energy correction factor.
3. Water level readings have been made at times and under conditions stated. Fluctuations may occur due to other factors than those present at the time measurements were made.

BORING LOG 2 NEWFANE BF 0106(6).GPJ VERMONT AOT.GDT 7/30/15

STATE OF VERMONT
AGENCY OF TRANSPORTATION
CONSTRUCTION AND
MATERIALS BUREAU
CENTRAL LABORATORY

BORING LOG

NEWFANE
BF 0106(6)
TH-2 BR-12

Boring No.: **B-104**
Page No.: 1 of 1
Pin No.: 13J306
Checked By: TDE

Boring Crew: JUDKINS, HOOK, HULBERT
Date Started: 6/30/15 Date Finished: 6/30/15
VTSPG NAD83: N 163214.74 ft E 1593445.08 ft
Station: 41+45.3 Offset: 0.22RT
Ground Elevation: 521.12 ft

	Casing	Sampler
Type:	WB	SS
I.D.:	4 in	1.5 in
Hammer Wt:	N.A.	140 lb.
Hammer Fall:	N.A.	30 in.
Hammer/Rod Type:	Auto/AWJ	
Rig:	CME 55 TRACK	C_E = 1.46

Groundwater Observations

Date	Depth (ft)	Notes

Depth (ft)	Strata (1)	CLASSIFICATION OF MATERIALS (Description)	Run (Dip deg.)	Core Rec. % (RQD %)	Drill Rate minutes/ft	Blows/6" (N Value)	Moisture Content %	Gravel %	Sand %	Fines %
		Asphalt Pavement, 0.0 ft - 0.5 ft								
		A-1-b, GrSa, brn, Moist, Rec. = 1.1 ft				14-12-8-5 (20)	10.6	38.2	48.0	13.8
		Field Note:, Cleaned out casing with roller cone								
5		A-2-4, Sa, Lt/brn, Moist, Rec. = 0.9 ft, Lab Note: Sample was orange colored.				2-2-3-4 (5)	21.4	0.7	80.4	18.9
		Field Note:, NXDC, Cleaned out casing								
10		Visual Description:, Severly weathered rock, Lt/brn, Moist, Rec. = 1.7 ft				19-18-17-22 (35)	20.2			
		Field Note:, NXDC, Cleaned out casing				R@1.0" (R)				
15		Visual Description:, Severly weathered rock, grn-blk, Moist, Rec. = 0.1 ft 15.1 ft - 20.1 ft, Dark gray, Massive AMPHIBOLITE, with vertical rust staining on joints. Hard, Very slightly weathered, Poor rock, NXMDC, RMR = 22	1 (-)	100 (0)	3 5 7 6 4	Top of Bedrock @ 15.1 ft	7.0			
20		20.1 ft - 25.1 ft, Dark gray, AMPHIBOLITE, with rust staining on joints. Hard, Slightly weathered, Poor rock, NXMDC, RMR = 29	2 (70-75)	100 (32)	2 3 8 4 4					
25		Hole stopped @ 25.1 ft Remarks: Hole collapsed at 16.9 ft.								

TOP OF BEDROCK EL=506.02

TOP OF ABUTMENT 2 EL=502.00

Notes:
1. Stratification lines represent approximate boundary between material types. Transition may be gradual.
2. N Values have not been corrected for hammer energy. C is the hammer energy correction factor.
3. Water level readings have been made at times and under conditions stated. Fluctuations may occur due to other factors than those present at the time measurements were made.

BORING LOG 2 NEWFANE BF 0106(6).GPJ VERMONT AOT.GDT 7/30/15

PROJECT NAME: NEWFANE
PROJECT NUMBER: BF 0106(6)

FILE NAME: s13j306bor.dgn
PROJECT LEADER: C. COTA
DESIGNED BY: C. BURRALL
BORING LOGS SHEET 2

PLOT DATE: 08-SEP-2020
DRAWN BY: M. LONGSTREET
CHECKED BY: C. BURRALL
SHEET 25 OF 64

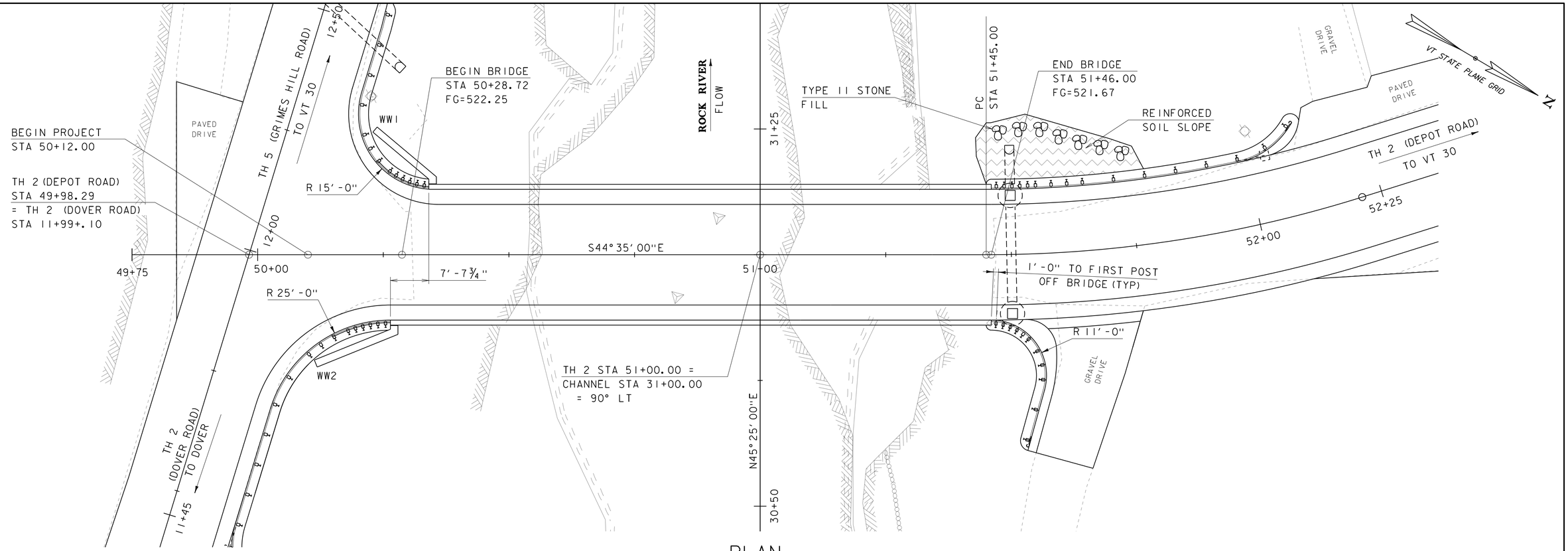

PLAN

SCALE 1" = 10'-0"
10 0 10

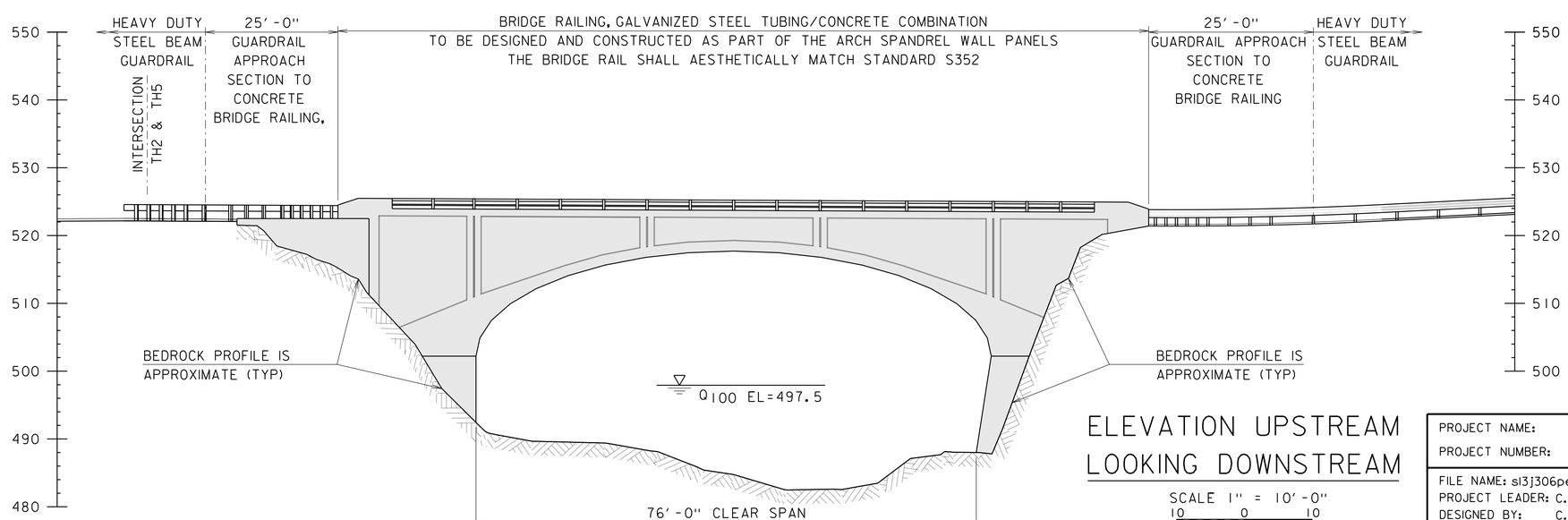

ELEVATION UPSTREAM
LOOKING DOWNSTREAM

SCALE 1" = 10'-0"
10 0 10

PROJECT NAME: NEWFANE	
PROJECT NUMBER: BF 0106(6)	
FILE NAME: s13j306pe.dgn	PLOT DATE: 08-SEP-2020
PROJECT LEADER: C. COTA	DRAWN BY: M. LONGSTREET
DESIGNED BY: C. BURRALL	CHECKED BY: C. BURRALL
PLAN & ELEVATION	SHEET 26 OF 64

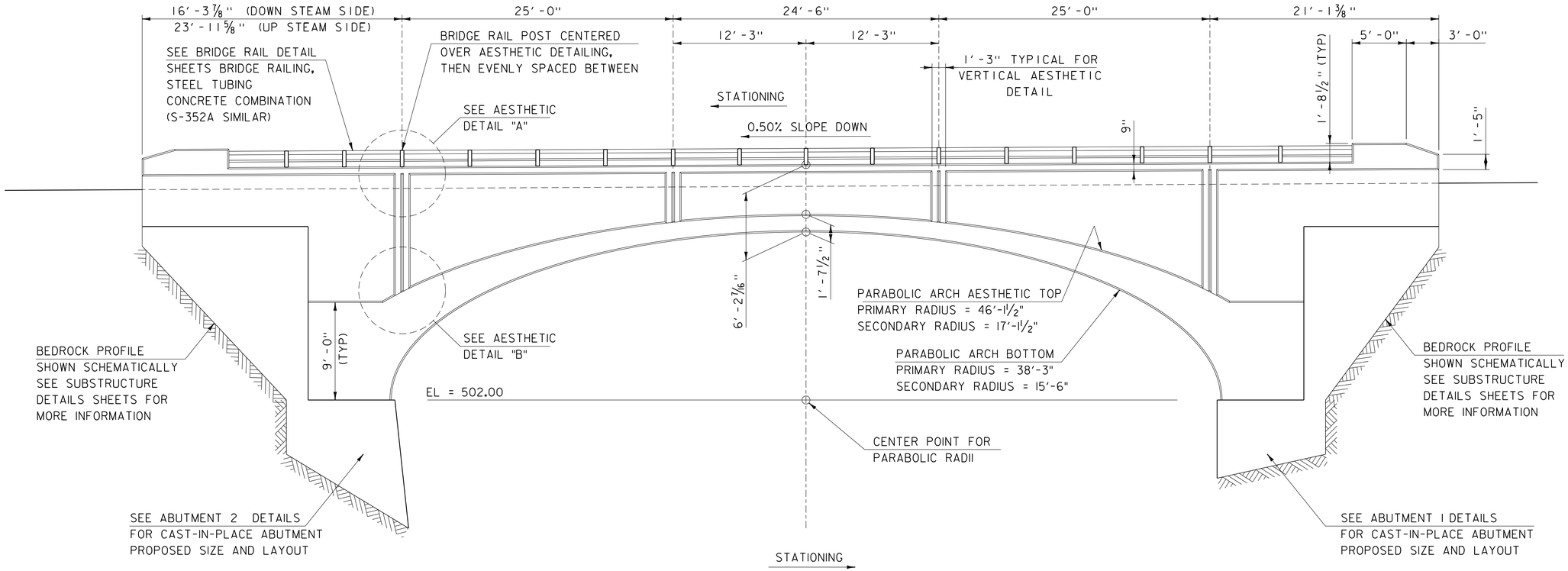

ARCH ELEVATION VIEW DOWNSTREAM SIDE LOOKING UPSTREAM

SCALE: 3/16" = 1'-0"

1. THE UPSTREAM SIDE LOOKING DOWNSTREAM IS SIMILAR

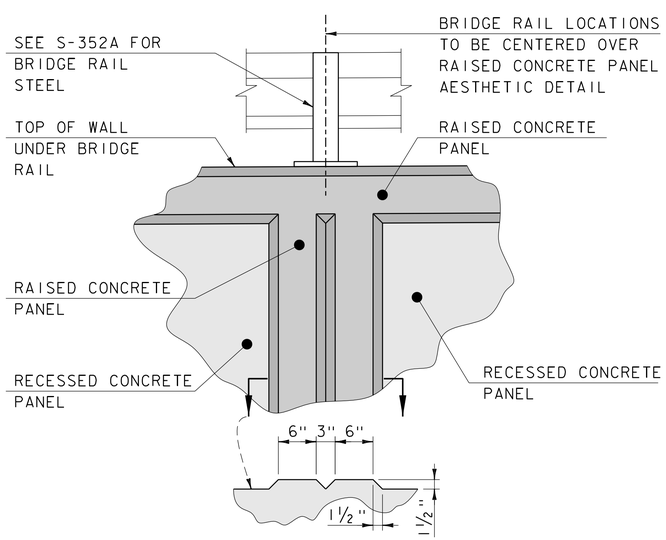

AESTHETIC DETAIL "A"

SCALE: 1" = 1'-0"

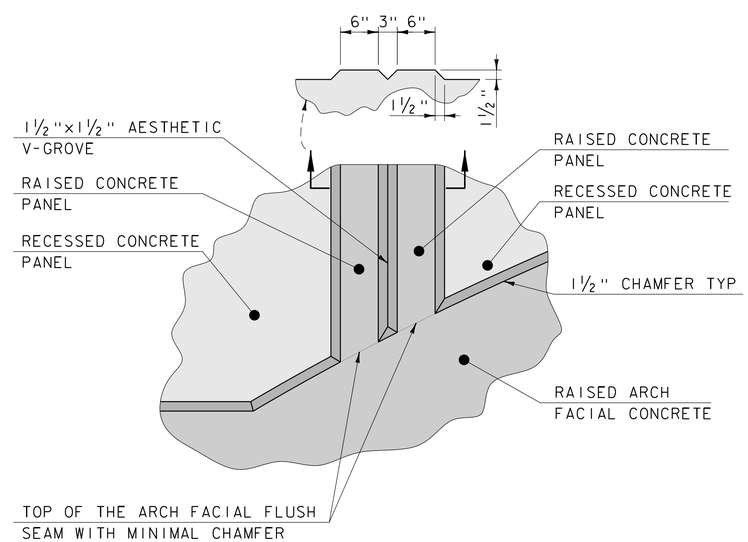

AESTHETIC DETAIL "B"

SCALE: 1" = 1'-0"

PROJECT NAME: NEWFANE	
PROJECT NUMBER: BF 0106(6)	
FILE NAME: sl3j306profile.dgn	PLOT DATE: 08-SEP-2020
PROJECT LEADER: C. COTA	DRAWN BY: M. LONGSTREET
DESIGNED BY: C. BURRALL	CHECKED BY: C. BURRALL
ARCH ELEVATION & DETAILS	SHEET 27 OF 64

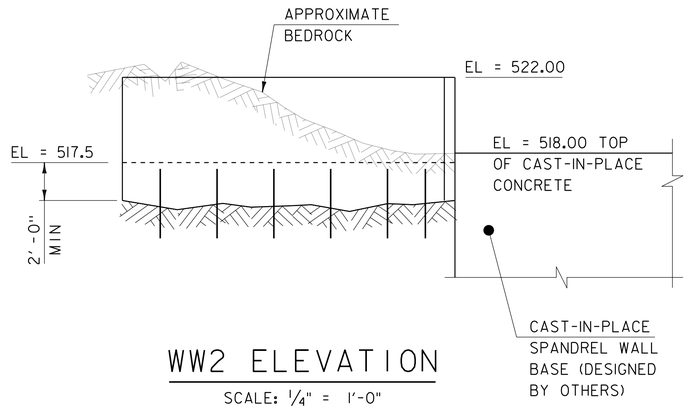

WW2 ELEVATION

SCALE: 1/4" = 1'-0"

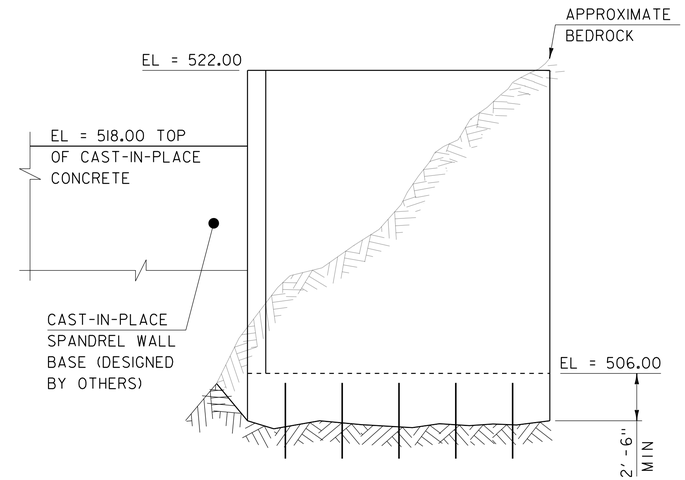

WW1 ELEVATION

SCALE: 1/4" = 1'-0"

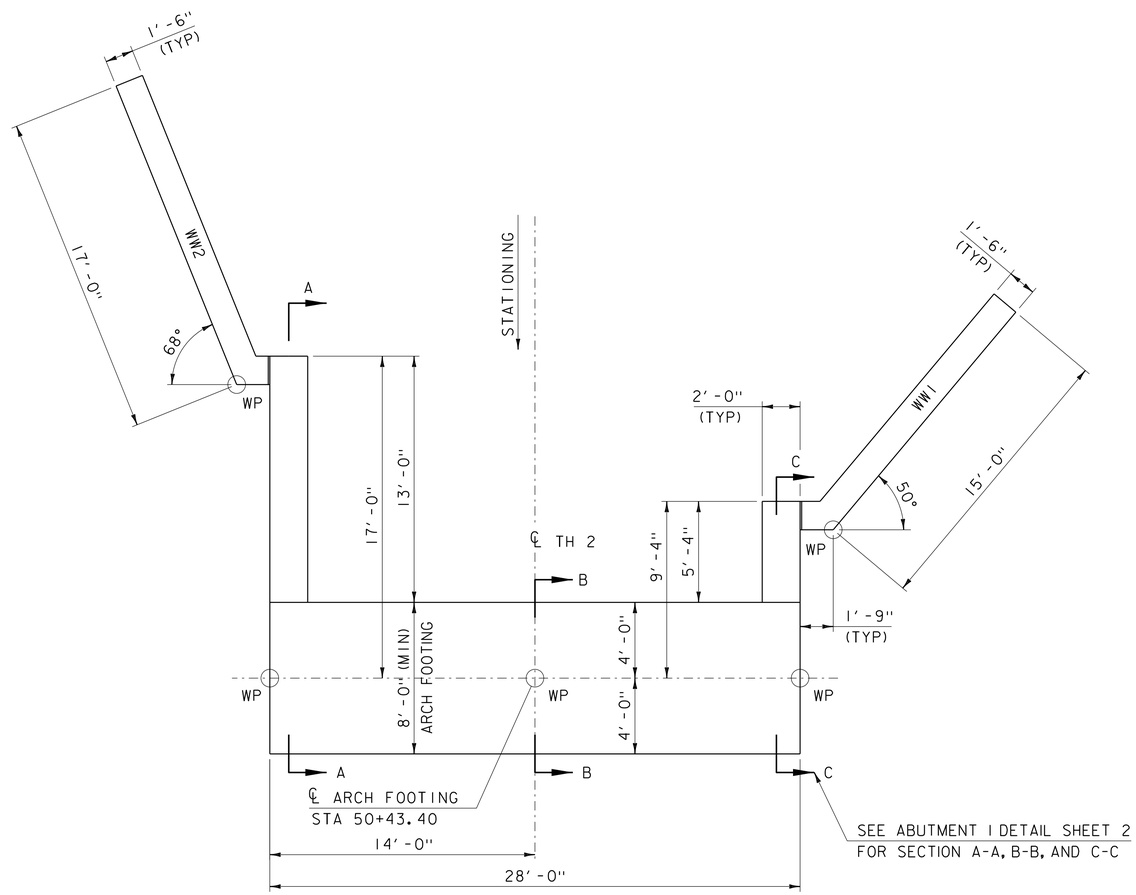

ABUTMENT 1 - PLAN

SCALE: 1/4" = 1'-0"

PROJECT NAME: NEWFANE	
PROJECT NUMBER: BF 0106(6)	
FILE NAME: sl3j306sub.dgn	PLOT DATE: 08-SEP-2020
PROJECT LEADER: C. COTA	DRAWN BY: M. LONGSTREET
DESIGNED BY: C. BURRALL	CHECKED BY: C. BURRALL
ABUTMENT 1 DETAIL SHEET 1	SHEET 28 OF 64

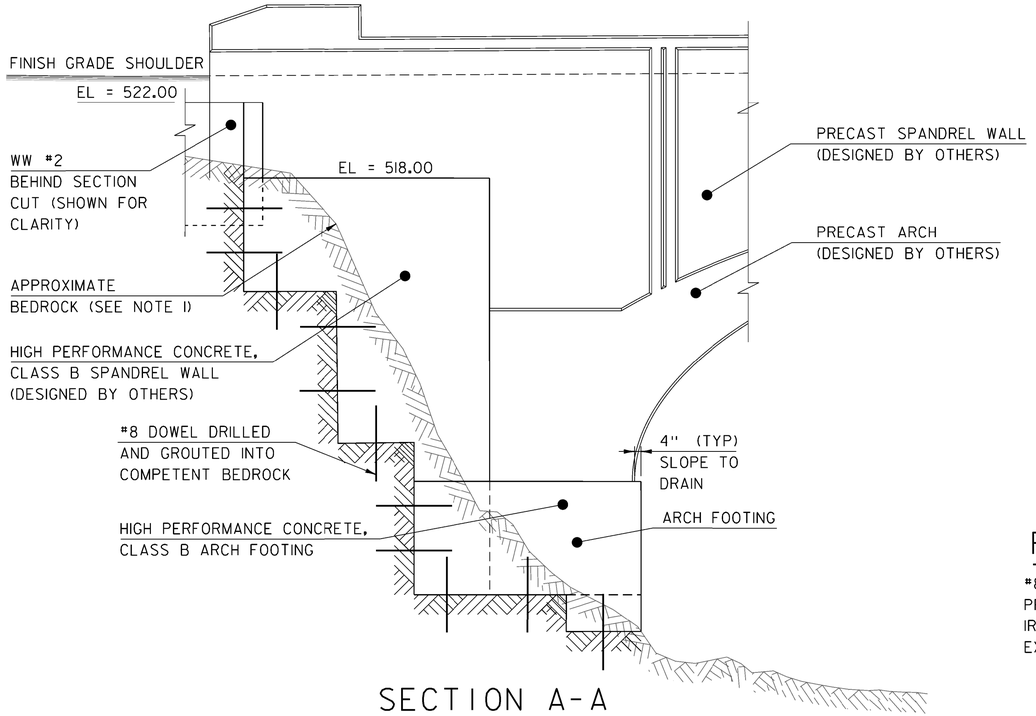

SECTION A-A

SCALE: 1/4" = 1'-0"

	BAR	SIZE	SPACING	TYPE
	A1	5	6"	STR
	A2	5	6"	STR
▲	A3	5	6"	STR
▲	A4	5	6"	STR
	A5	5	6"	STR
▲	A6	8	AS SHOWN	STR

REINFORCING REQUIREMENTS

#8 DOWELS (A6) DRILLED AND GROUTED 2'-0" MINIMUM INTO BEDROCK. PROPOSED BEDROCK SHOWN IS APPROXIMATE. VARIATIONS AND IRREGULAR SURFACE IS EXPECTED ONCE COMPETENT BEDROCK IS EXPOSED.

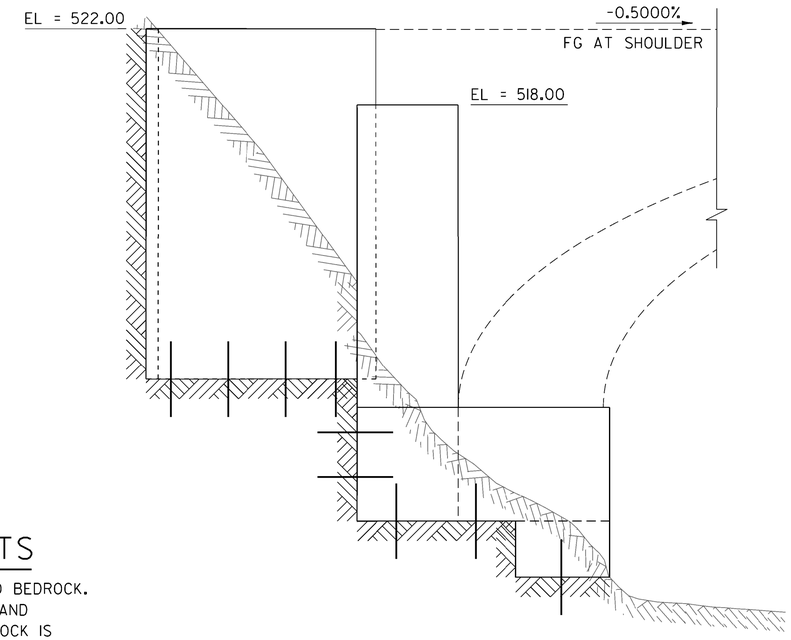

SECTION C-C

SCALE: 1/4" = 1'-0"

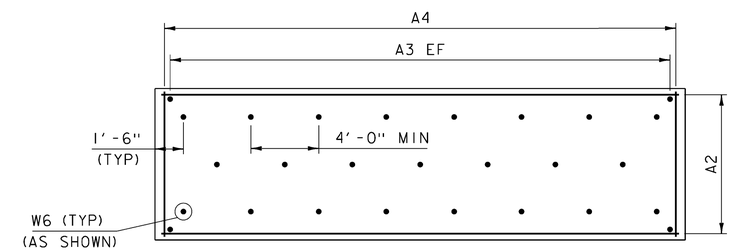

ARCH FOOTING REINFORCING - PLAN

SCALE: 1/4" = 1'-0"

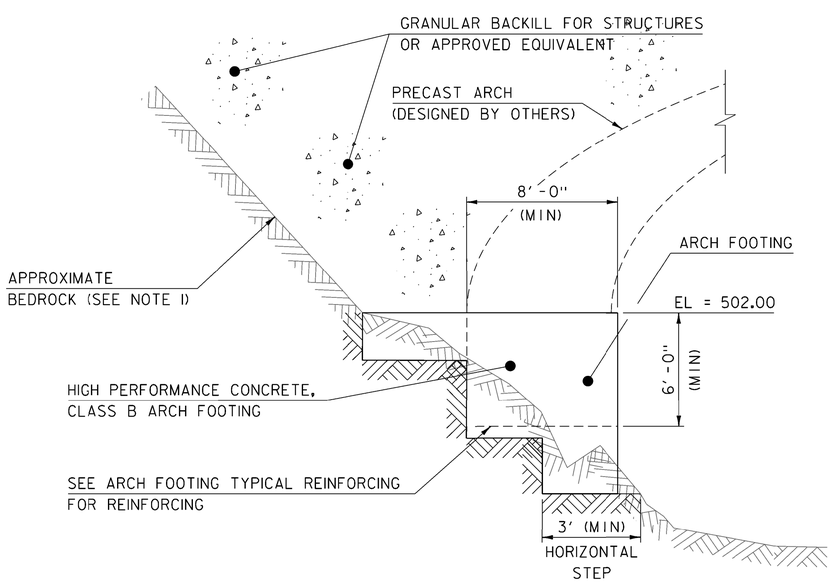

SECTION B-B

SCALE: 1/4" = 1'-0"

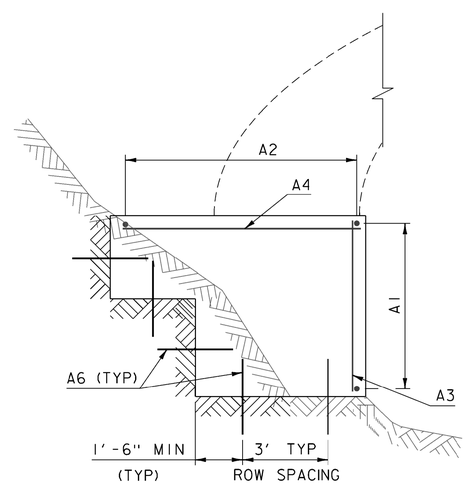

ARCH FOOTING TYPICAL REINFORCING

SCALE: 1/4" = 1'-0"

A6 DOWEL REQUIREMENTS

STEP SIZE	ROWS REQ'D
3'-5.9'	1
6'-8.9'	2
9'-11.9'	3
12'-14.9'	4

NOTE:

NF = NEAR FACE
FF = FAR FACE
EF = EACH FACE
▲ = CUT TO FIT IN FIELD
3" CLEAR UNLESS OTHERWISE NOTED
2'-2" BAR LAP UNLESS OTHERWISE NOTED
HOOKS AND BENDS ARE STANDARD UNLESS OTHERWISE NOTED
REINFORCING DEPICTED IS MINIMUM REQUIRED REINFORCING. THE CONTRACTOR MAY ELECT TO MODIFY REINFORCING SCHEME IN ORDER TO MEET THEIR MEANS AND METHODS WHILE STILL MEETING THE MINIMUM REINFORCING SHOWN

NOTES:

1. BEDROCK LOCATIONS SHOWN HERE, AND ELSEWHERE IN THE PLANS, IS APPROXIMATE. THE CONTRACTOR IS RESONSIBLE FOR DETERMINING ACTUAL BEDROCK LOCATION AND ADJUSTING MEANS AND METHODS TO ACCOMODATE VARIABLE FIELD CONDITIONS.

2. ABUTMENT #1 FOOTING SHOWN, ABUTMENT #2 SIMILAR.

PROJECT NAME: NEWFANE	
PROJECT NUMBER: BF 0106(6)	
FILE NAME: s13j306sub.dgn	PLOT DATE: 08-SEP-2020
PROJECT LEADER: C. COTA	DRAWN BY: M. LONGSTREET
DESIGNED BY: C. BURRALL	CHECKED BY: C. BURRALL
ABUTMENT 1 DETAILS 2	SHEET 29 OF 64

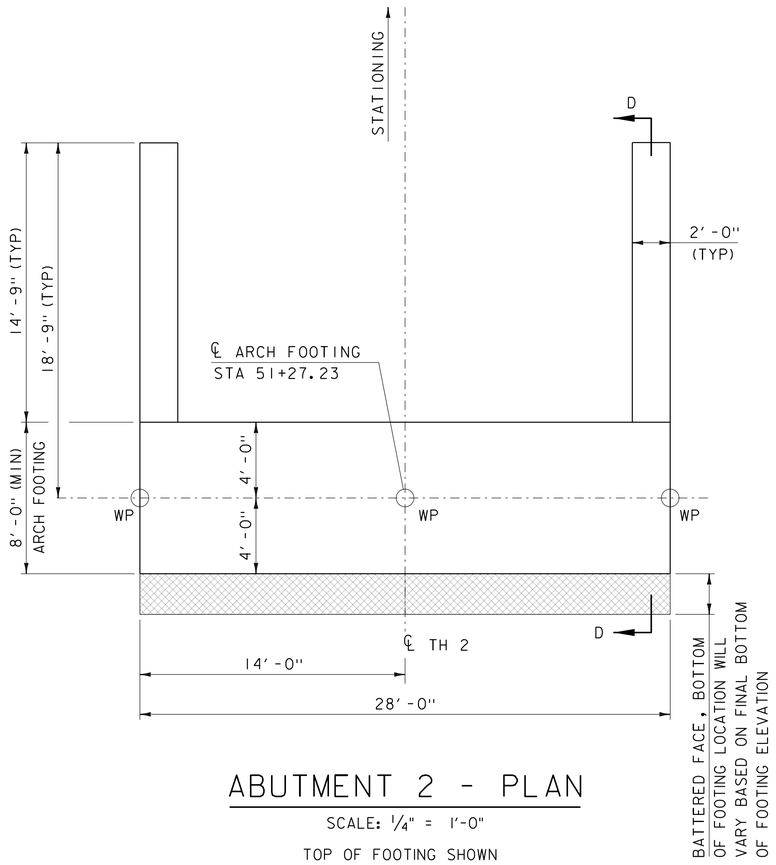

ABUTMENT 2 - PLAN

SCALE: 1/4" = 1'-0"

TOP OF FOOTING SHOWN

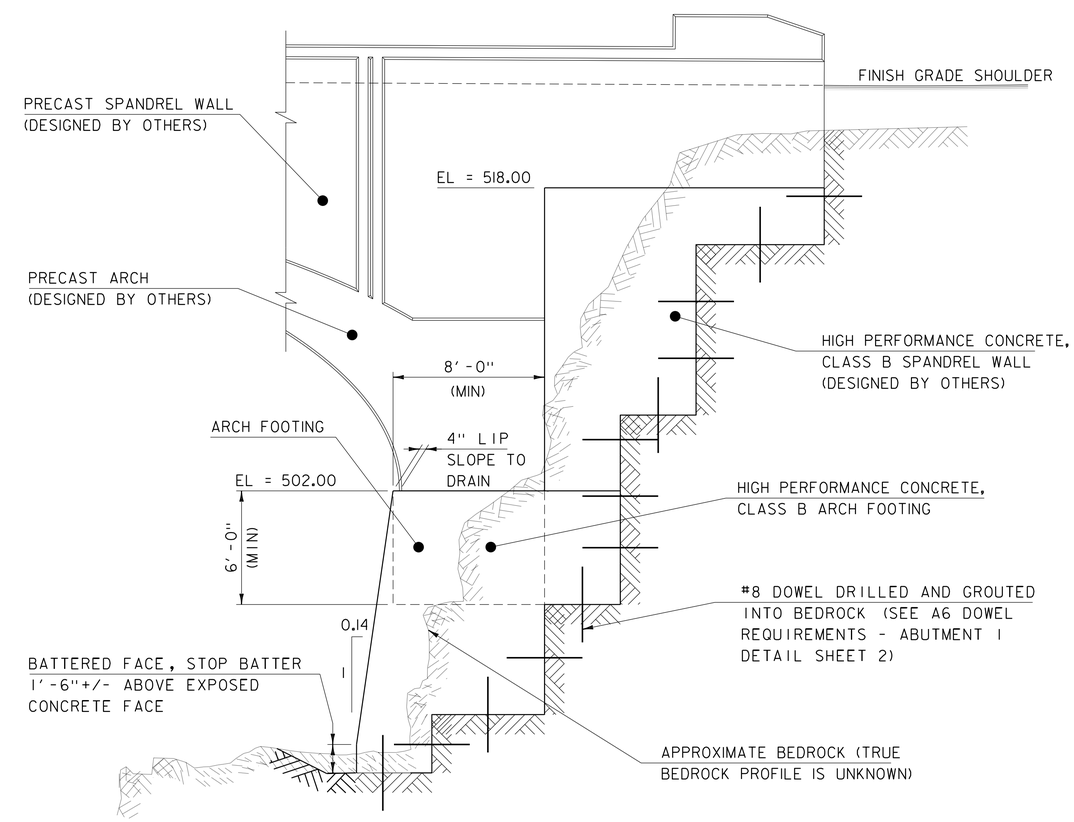

SECTION D-D

SCALE: 1/4" = 1'-0"

NOTES:

1. BEDROCK LOCATIONS SHOWN HERE, AND ELSEWHERE IN THE PLANS, IS APPROXIMATE. THE CONTRACTOR IS RESONSIBLE FOR DETERMINING ACTUAL BEDROCK LOCATION AND ADJUSTING MEANS AND METHODS TO ACCOMODATE VARIABLE FIELD CONDITIONS.

2. SEE REINFORCING REQUIREMENTS AND A6 DOWEL SPACING REQUIREMENTS - ABUTMENT 1 DETAILS 2.

PROJECT NAME: NEWFANE	
PROJECT NUMBER: BF 0106(6)	
FILE NAME: s13j306sub.dgn	PLOT DATE: 08-SEP-2020
PROJECT LEADER: C. COTA	DRAWN BY: M. LONGSTREET
DESIGNED BY: C. BURRALL	CHECKED BY: C. BURRALL
ABUTMENT 2 DETAIL SHEET	SHEET 30 OF 64

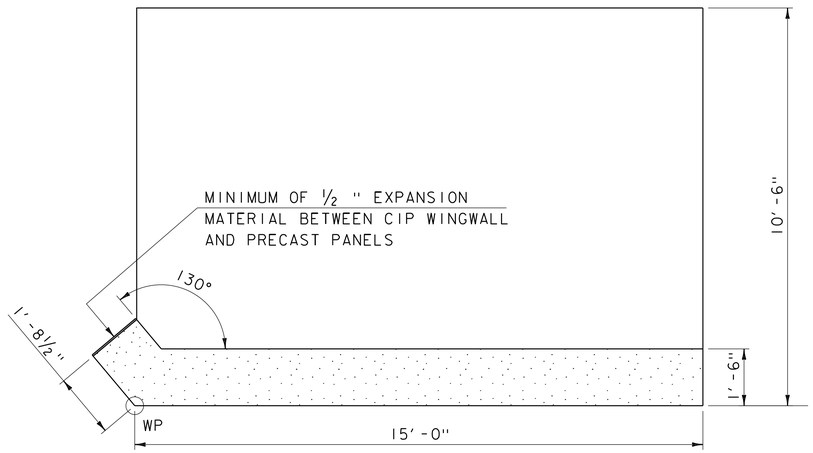

WINGWALL 1 PLAN

SCALE: 1/2" = 1'-0"

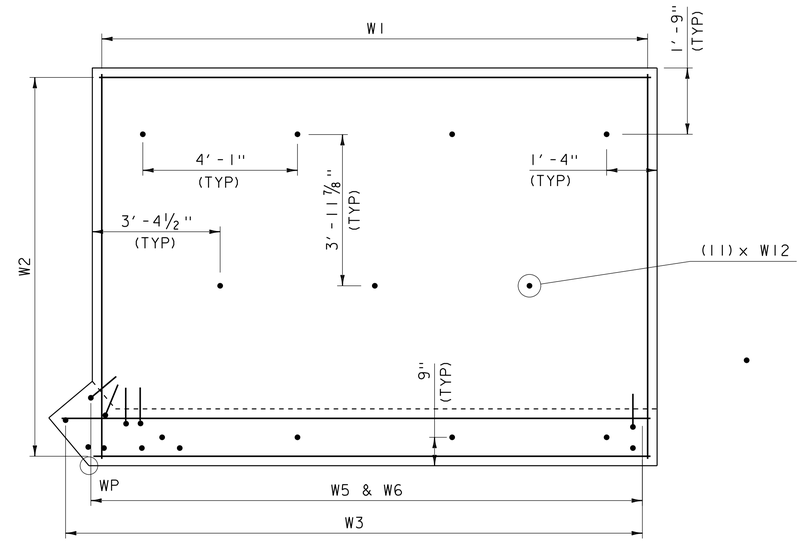

WINGWALL 1 FOOTING PLAN - REINFORCING

SCALE: 1/2" = 1'-0"

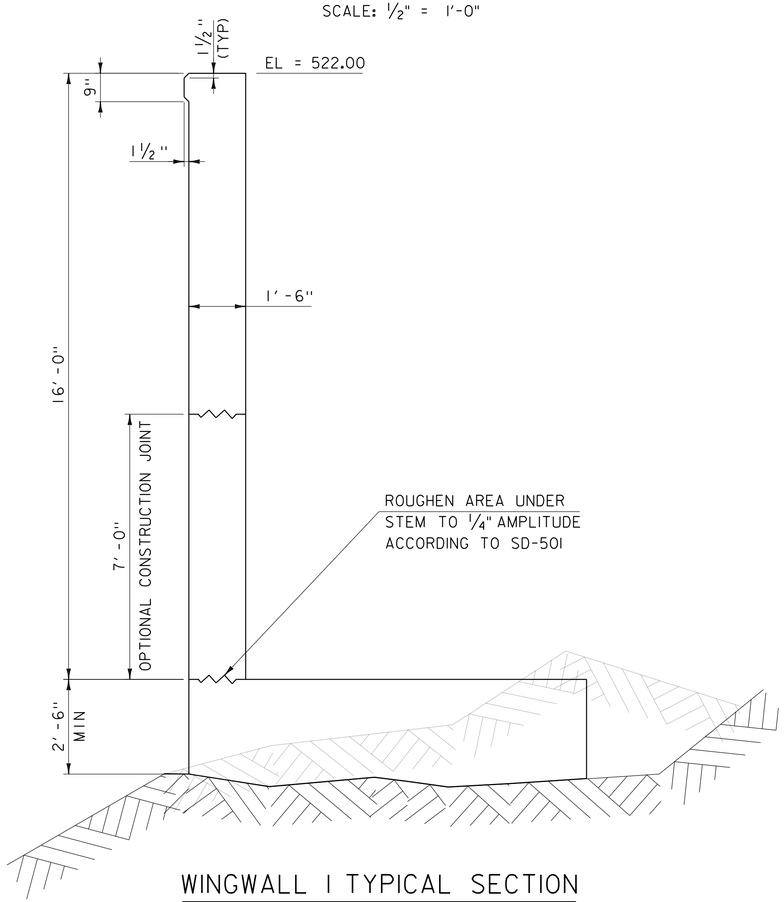

WINGWALL 1 TYPICAL SECTION

SCALE: 1/2" = 1'-0"

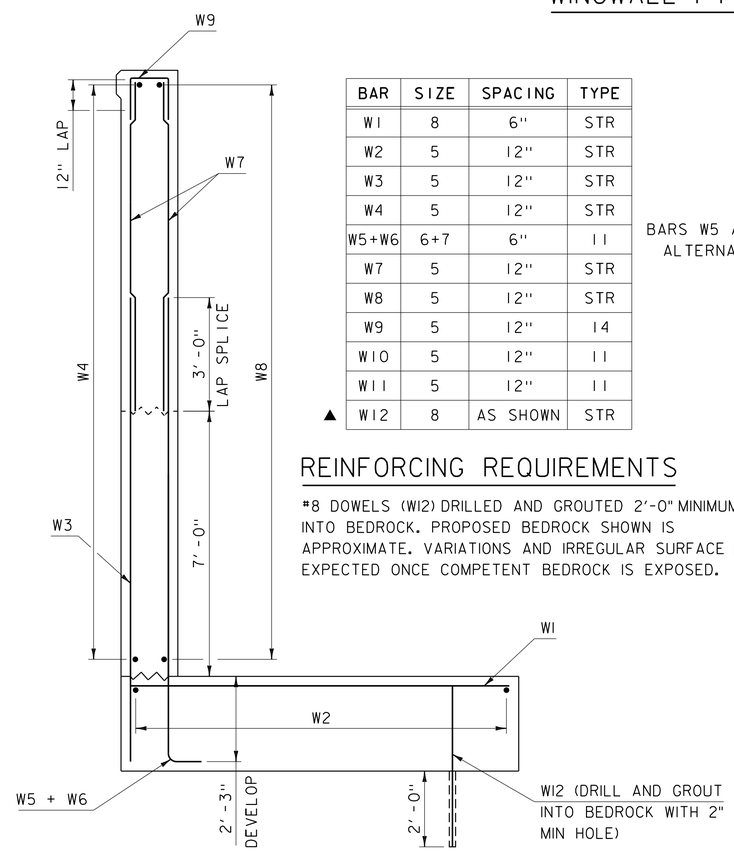

WINGWALL 1 TYPICAL REINFORCING

SCALE: 1/2" = 1'-0"

BAR	SIZE	SPACING	TYPE
W1	8	6"	STR
W2	5	12"	STR
W3	5	12"	STR
W4	5	12"	STR
W5+W6	6+7	6"	11
W7	5	12"	STR
W8	5	12"	STR
W9	5	12"	14
W10	5	12"	11
W11	5	12"	11
▲ W12	8	AS SHOWN	STR

BARS W5 AND W6 ARE #6 AND #7 BARS ALTERNATING AT A SPACING OF 6"

REINFORCING REQUIREMENTS

#8 DOWELS (W12) DRILLED AND GROUTED 2'-0" MINIMUM INTO BEDROCK. PROPOSED BEDROCK SHOWN IS APPROXIMATE. VARIATIONS AND IRREGULAR SURFACE IS EXPECTED ONCE COMPETENT BEDROCK IS EXPOSED.

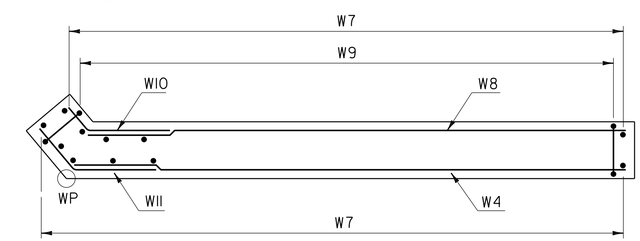

WINGWALL 1 STEM REINFORCING - PLAN

SCALE: 1/2" = 1'-0"

NOTE:

NF = NEAR FACE
FF = FAR FACE
EF = EACH FACE
▲ = CUT TO FIT IN FIELD
3" CLEAR UNLESS OTHERWISE NOTED
2'-2" BAR LAP UNLESS OTHERWISE NOTED
HOOKS AND BENDS ARE STANDARD UNLESS OTHERWISE NOTED
REINFORCING DEPICTED IS MINIMUM REQUIRED REINFORCING. THE CONTRACTOR MAY ELECT TO MODIFY REINFORCING SCHEME IN ORDER TO MEET THEIR MEANS AND METHODS WHILE STILL MEETING THE MINIMUM REINFORCING SHOWN

PROJECT NAME: NEWFANE
PROJECT NUMBER: BF 0106(6)

FILE NAME: BF 0106(6).dgn
PROJECT LEADER: C. COTA
DESIGNED BY: R. HOOD
WINGWALL 1 DETAILS

PLOT DATE: 08-SEP-2020
DRAWN BY: G. DARGAN
CHECKED BY: G. DARGAN
SHEET 31 OF 64

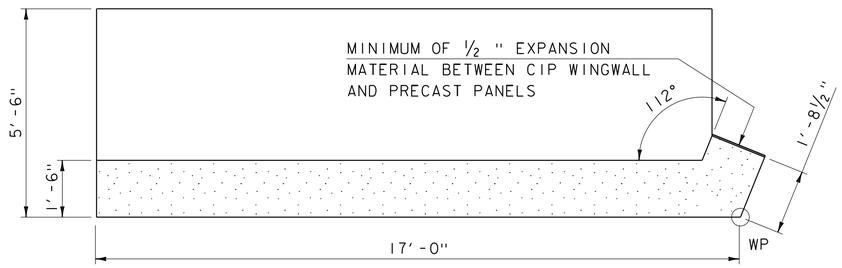

WINGWALL 2 PLAN

SCALE: ½" = 1'-0"

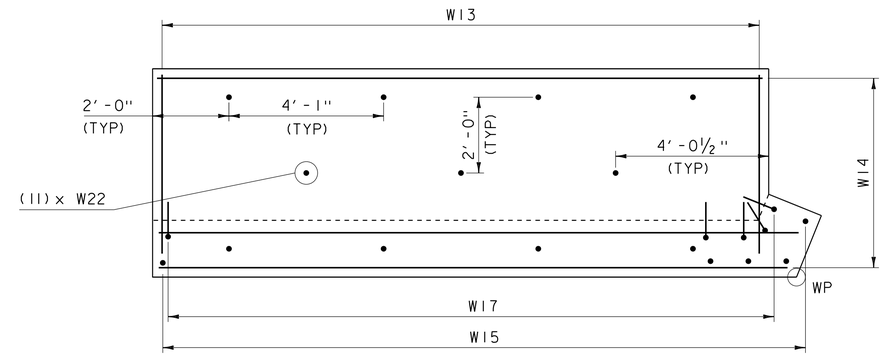

WINGWALL 2 FOOTING PLAN - REINFORCING

SCALE: ½" = 1'-0"

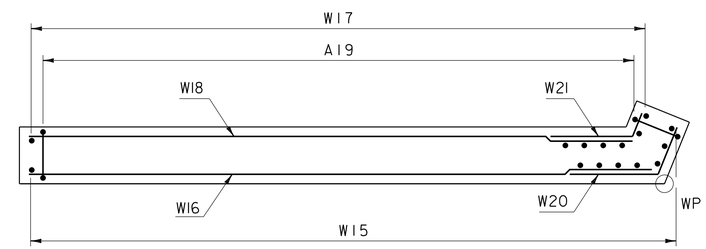

WINGWALL 2 STEM REINFORCING - PLAN

SCALE: ½" = 1'-0"

BAR	SIZE	SPACING	TYPE
W13	5	12"	STR
W14	5	12"	STR
W15	5	12"	STR
W16	5	12"	STR
W17	5	12"	11
W18	5	12"	STR
W19	5	12"	14
W20	5	12"	11
W21	5	12"	11
▲ W22	8	AS SHOWN	STR

REINFORCING REQUIREMENTS

#8 DOWELS (W22) DRILLED AND GROUTED 2'-0" MINIMUM INTO BEDROCK. PROPOSED BEDROCK SHOWN IS APPROXIMATE. VARIATIONS AND IRREGULAR SURFACE IS EXPECTED ONCE COMPETENT BEDROCK IS EXPOSED.

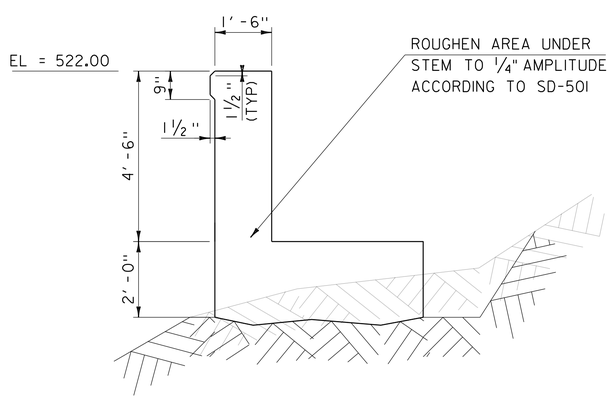

WINGWALL 2 TYPICAL SECTION

SCALE: ½" = 1'-0"

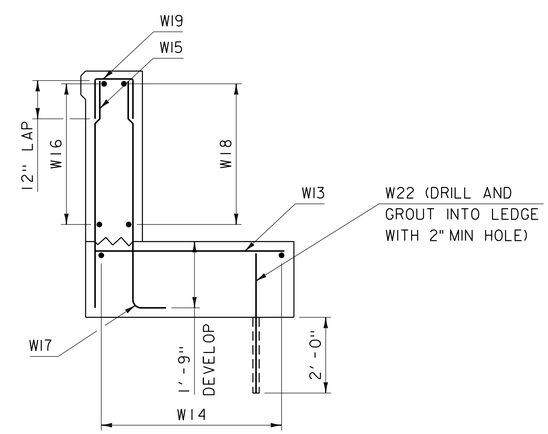

WINGWALL 2 TYPICAL REINFORCING

SCALE: ½" = 1'-0"

NOTE:

NF = NEAR FACE
FF = FAR FACE
EF = EACH FACE
▲ = CUT TO FIT IN FIELD
3" CLEAR UNLESS OTHERWISE NOTED
2'-2" BAR LAP UNLESS OTHERWISE NOTED
HOOKS AND BENDS ARE STANDARD UNLESS OTHERWISE NOTED
REINFORCING DEPICTED IS MINIMUM REQUIRED REINFORCING. THE CONTRACTOR MAY ELECT TO MODIFY REINFORCING SCHEME IN ORDER TO MEET THEIR MEANS AND METHODS WHILE STILL MEETING THE MINIMUM REINFORCING SHOWN.

PROJECT NAME: NEWFANE
PROJECT NUMBER: BF 0106(6)

FILE NAME: BF 0106(6).dgn
PROJECT LEADER: C. COTA
DESIGNED BY: R. HOOD
WINGWALL 2 DETAILS

PLOT DATE: 08-SEP-2020
DRAWN BY: G. DARGAN
CHECKED BY: G. DARGAN
SHEET 32 OF 64

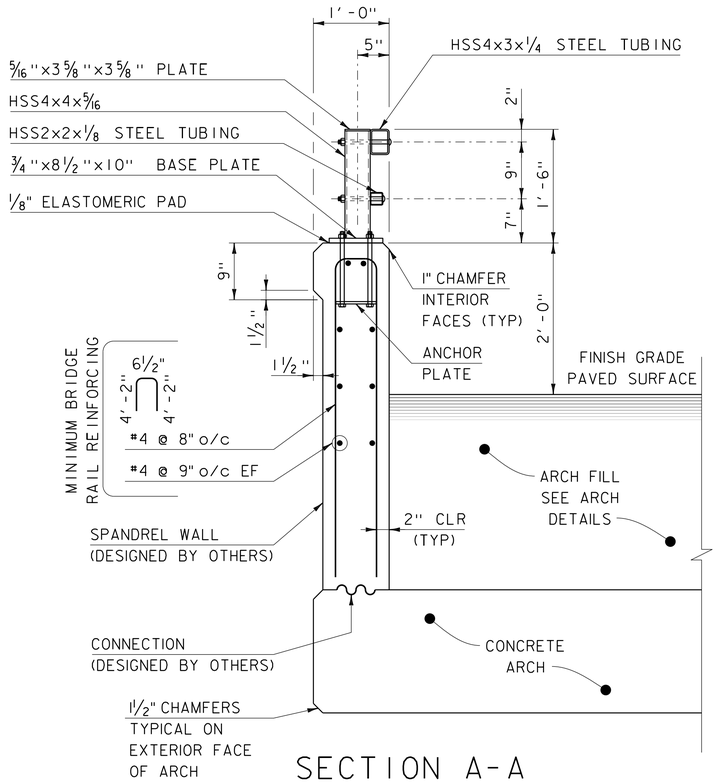

SECTION A-A

SCALE: 1" = 1'-0"

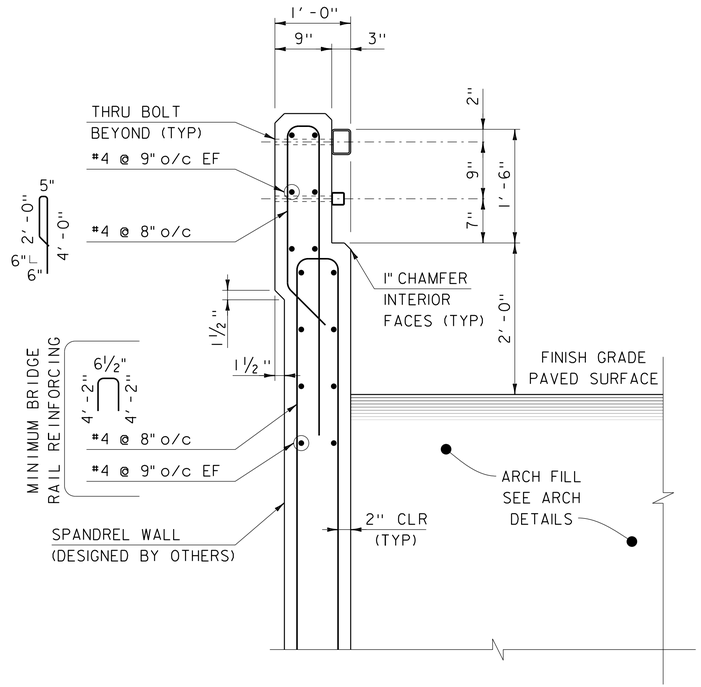

SECTION B-B

SCALE: 1" = 1'-0"

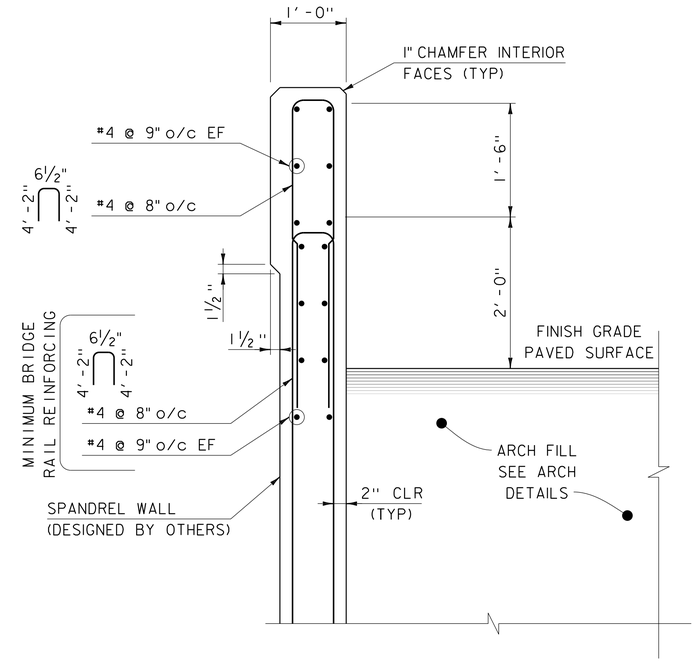

SECTION C-C

SCALE: 1" = 1'-0"

NOTES:

1. ALL WORK AND MATERIALS SHALL CONFORM TO SECTION 525.
2. PRIOR TO GALVANIZING THE ASSEMBLED POST, GRIND ALL EDGES TO A MINIMUM RADIUS OF 1/16".
3. ALL POSTS SHALL BE SET NORMAL TO GRADE.
4. SECTIONS OF RAIL TUBE SHALL BE ATTACHED TO A MINIMUM OF TWO BRIDGE POSTS AND PREFERABLY TO AT LEAST 4 POSTS.
5. HOLES IN RAILS FOR TUBE ATTACHMENT MAY BE FIELD-DRILLED. HOLES SHALL BE COATED WITH AN APPROVED ZINC-RICH PAINT PRIOR TO INSTALLATION.
6. BOLTS SHALL BE TORQUED SNUG TIGHT (APPROXIMATELY 100 FT-LB).
7. RAIL TUBES SHALL BE ATTACHED USING 3/4" FULL DIAMETER BODY ASTM A 449 (TYPE 1) ROUND HEAD BOLTS INSERTED THROUGH THE FACE OF THE TUBE.
8. SEE STANDARD DRAWING G-1 FOR DETAILS OF DELINEATORS. A DELINEATOR SHALL BE INSTALLED AT 30 FOOT SPACING OR THE NEAREST POST. WHITE IS TO BE INSTALLED ON THE DRIVER'S RIGHT. FOR ONE WAY BRIDGES, YELLOW IS TO BE INSTALLED ON THE DRIVER'S LEFT. PAYMENT FOR DELINEATORS SHALL BE INCIDENTAL TO OTHER ITEMS.

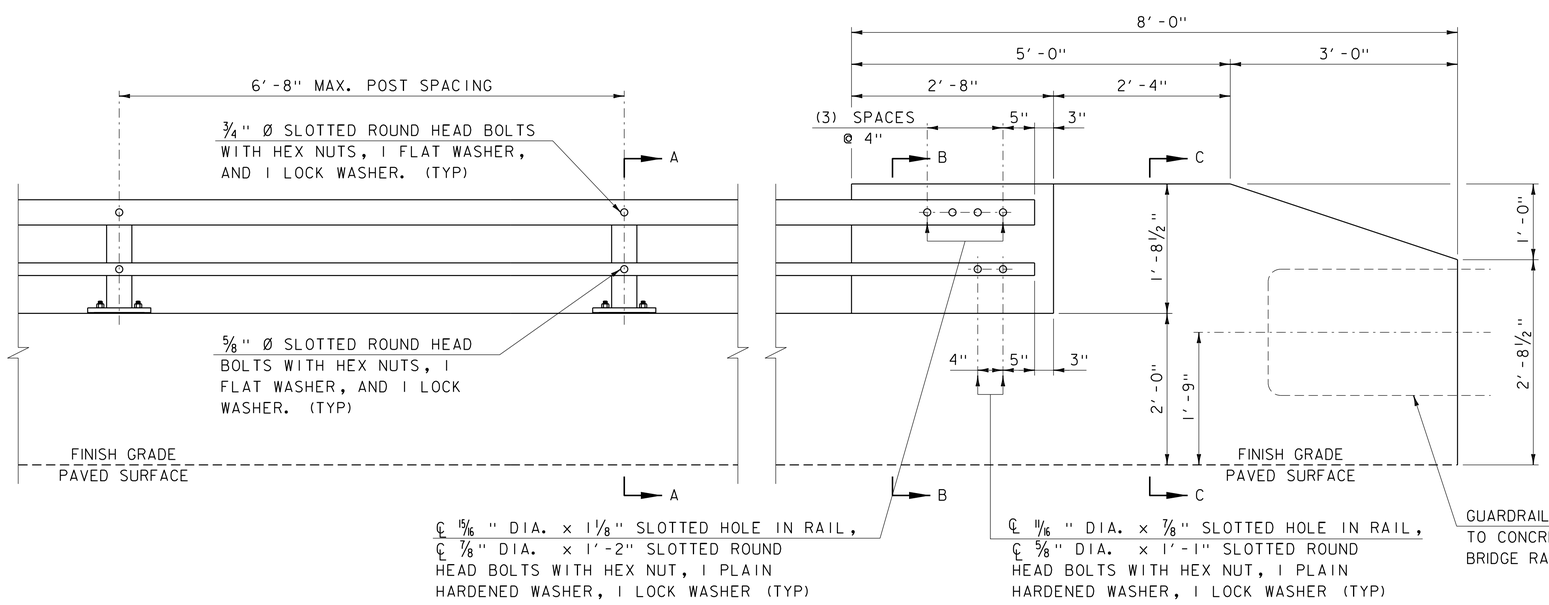

BRIDGE RAIL ELEVATION

SCALE: 1/4" = 1'-0"

PROJECT NAME: NEWFANE	
PROJECT NUMBER: BF 0106(6)	
FILE NAME: s13j306brail.dgn	PLOT DATE: 08-SEP-2020
PROJECT LEADER: C. COTA	DRAWN BY: M. LONGSTREET
DESIGNED BY: C. BURRALL	CHECKED BY: C. BURRALL
BRIDGE RAIL DETAILS 1	SHEET 33 OF 64

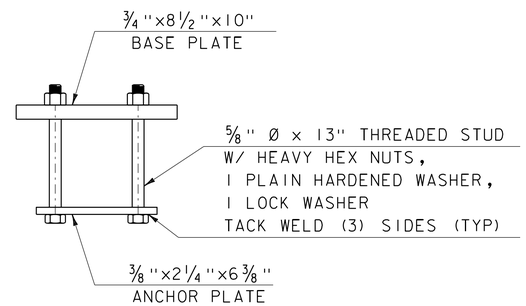

RAIL POST ANCHORAGE

SCALE: 1" = 1'-0"

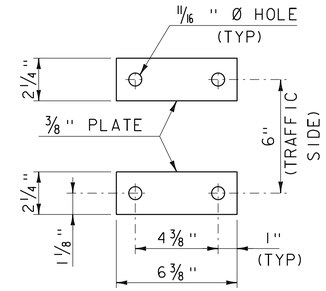

ANCHOR PLATES

SCALE: 1" = 1'-0"

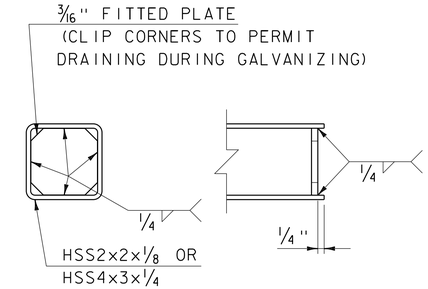

END OF RAIL DETAIL

SCALE: 1" = 1'-0"

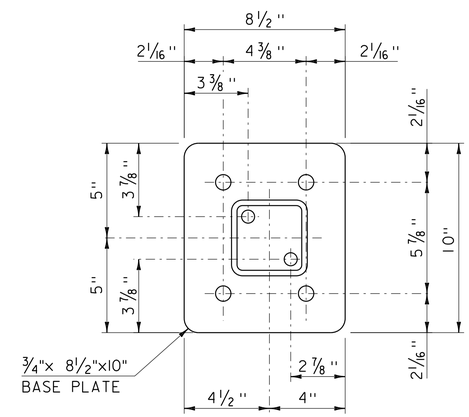

BASE PLATE DETAIL

SCALE: 1" = 1'-0"

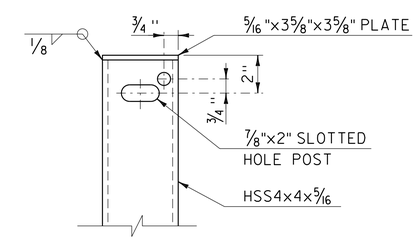

RAIL POST

SCALE: 1" = 1'-0"

PROJECT NAME: NEWFANE	
PROJECT NUMBER: BF 0106(6)	
FILE NAME: s13j306brail.dgn	PLOT DATE: 08-SEP-2020
PROJECT LEADER: C. COTA	DRAWN BY: M. LONGSTREET
DESIGNED BY: C. BURRALL	CHECKED BY: C. BURRALL
BRIDGE RAIL DETAILS 2	SHEET 34 OF 64

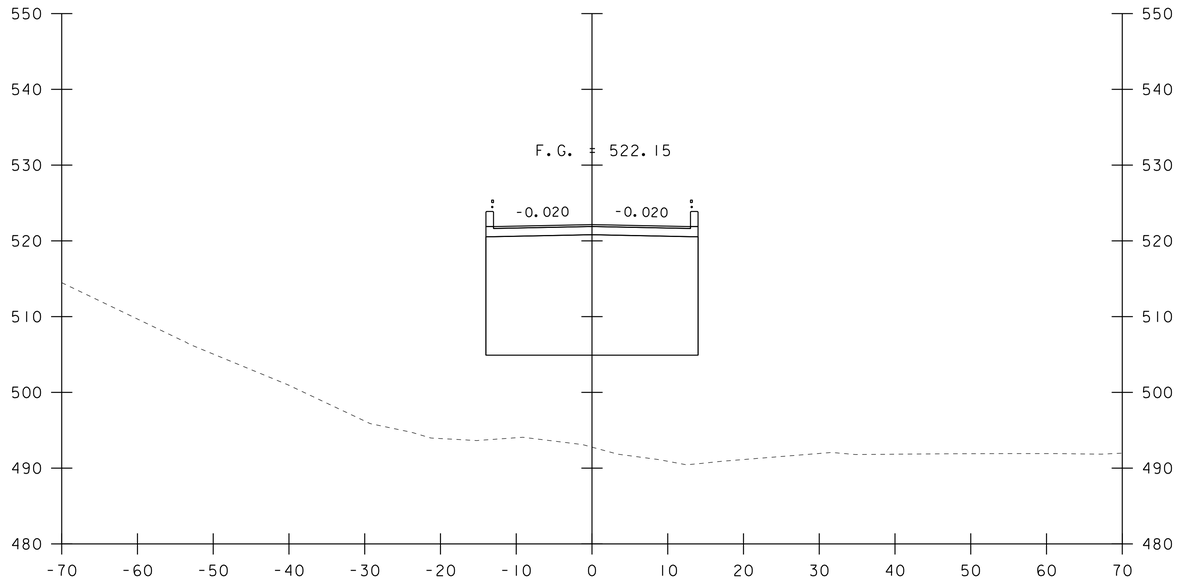

50+50

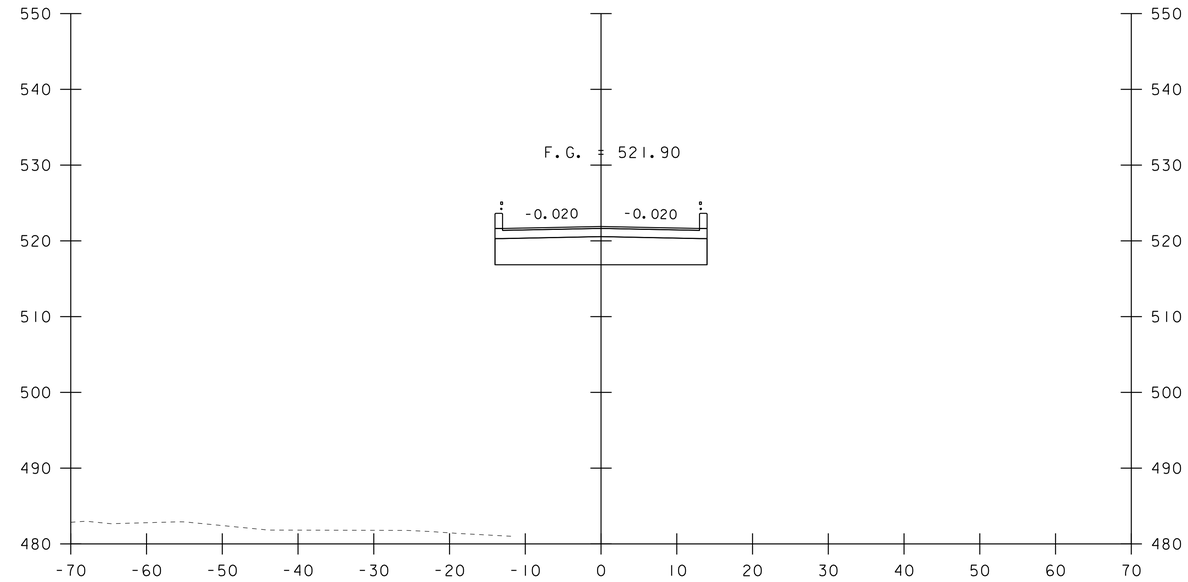

51+00

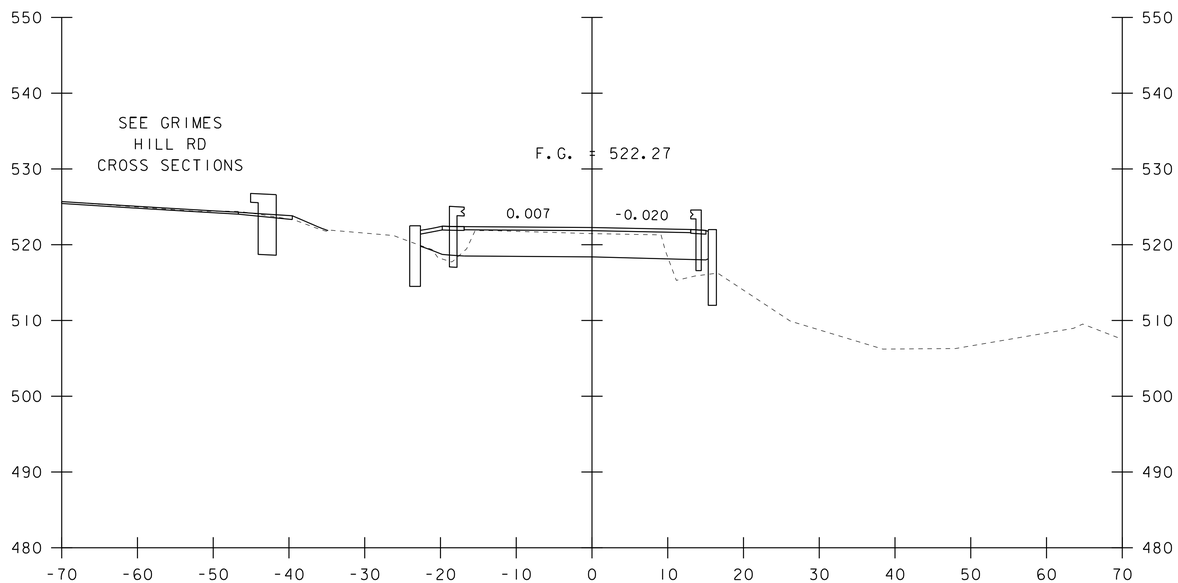

50+25

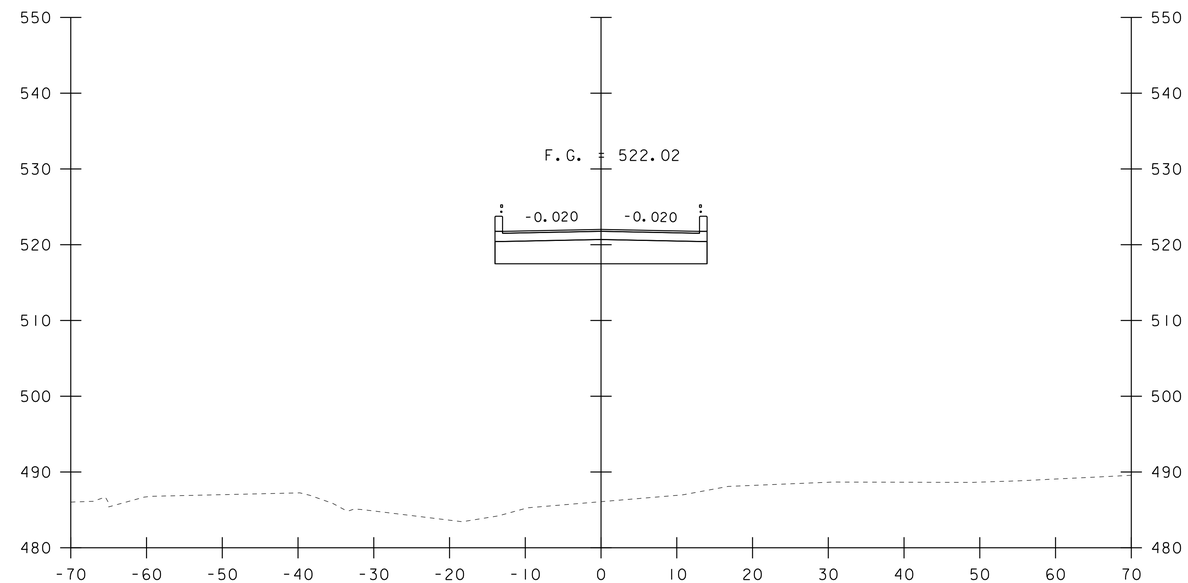

50+75

STA. 50+25 TO STA. 51+00

PROJECT NAME: NEWFANE	
PROJECT NUMBER: BF 0106(6)	
FILE NAME: sl3j306xs.dgn	PLOT DATE: 08-SEP-2020
PROJECT LEADER: C. COTA	DRAWN BY: M. LONGSTREET
DESIGNED BY: C. BURRALL	CHECKED BY: C. BURRALL
DEPOT RD (TH 2) CROSS SECTIONS 1	SHEET 35 OF 64

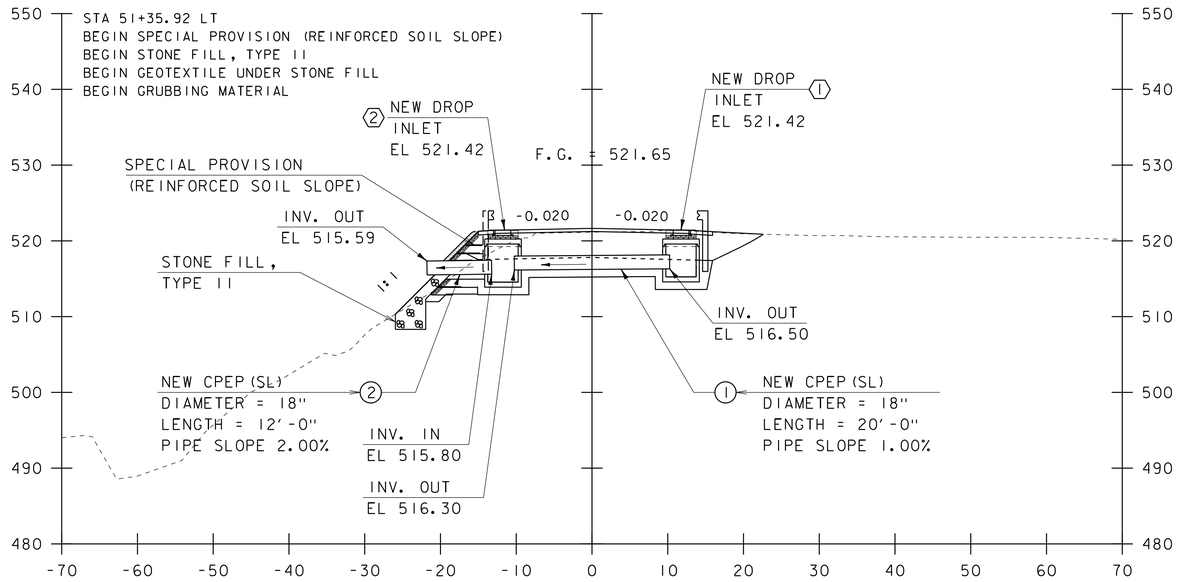

51+50

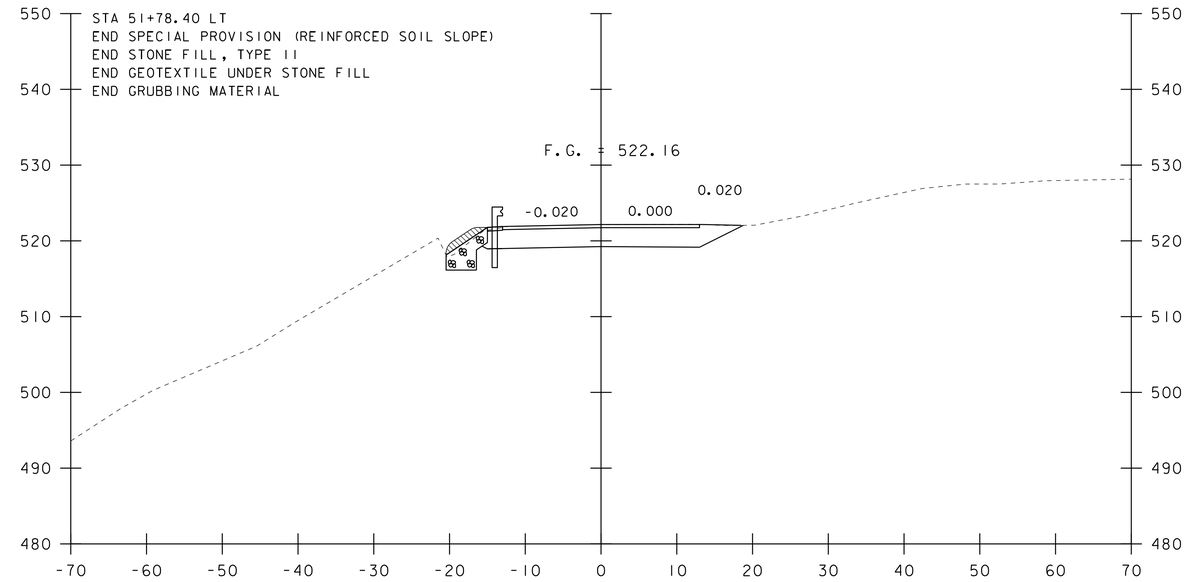

51+75

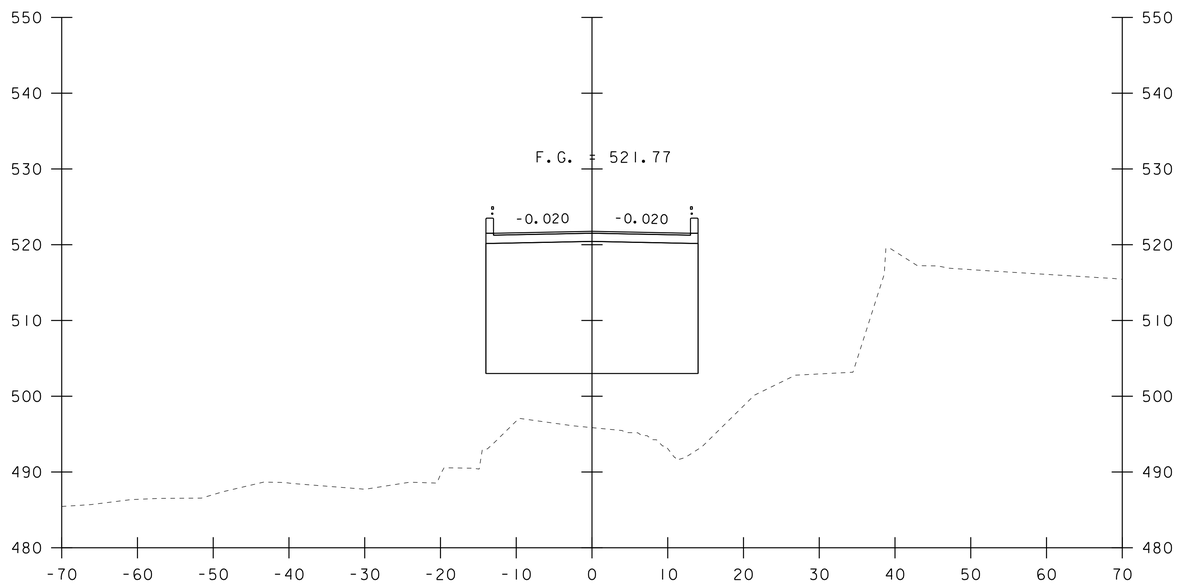

51+25

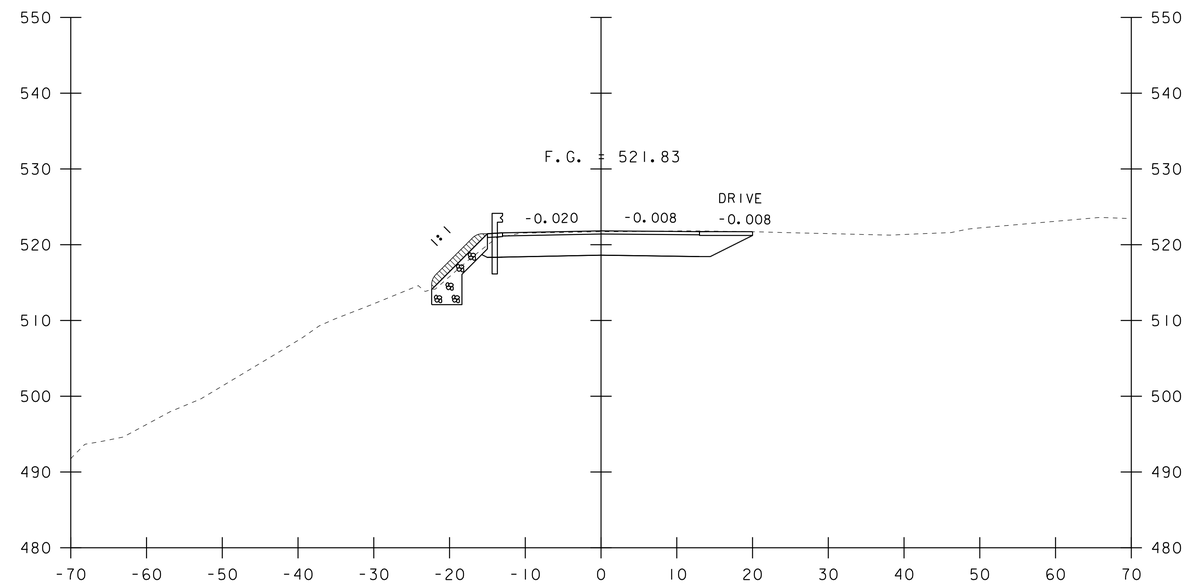

51+65

STA. 51+25 TO STA. 51+75

PROJECT NAME: NEWFANE	
PROJECT NUMBER: BF 0106(6)	
FILE NAME: sl3j306xs.dgn	PLOT DATE: 08-SEP-2020
PROJECT LEADER: C. COTA	DRAWN BY: M. LONGSTREET
DESIGNED BY: C. BURRALL	CHECKED BY: C. BURRALL
DEPOT RD (TH 2) CROSS SECTIONS 2	SHEET 36 OF 64

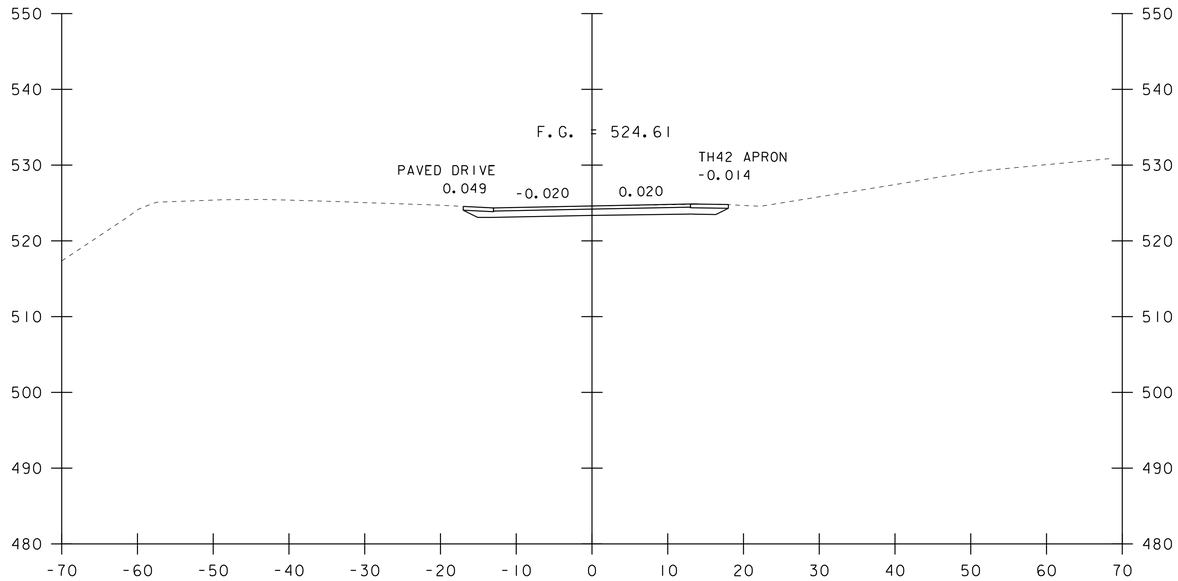

52+25

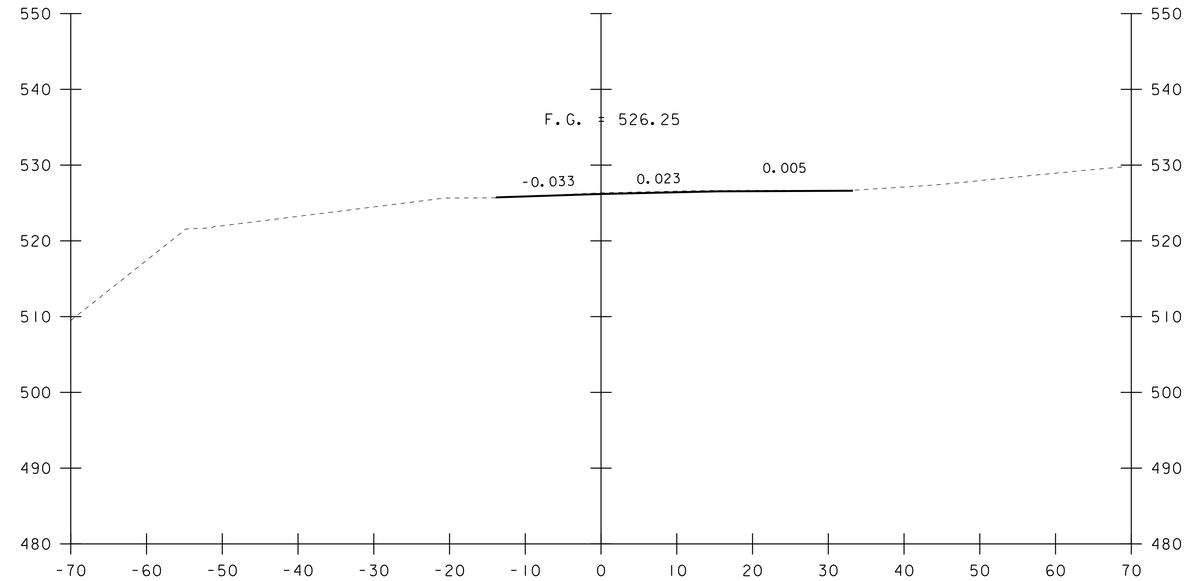

52+75

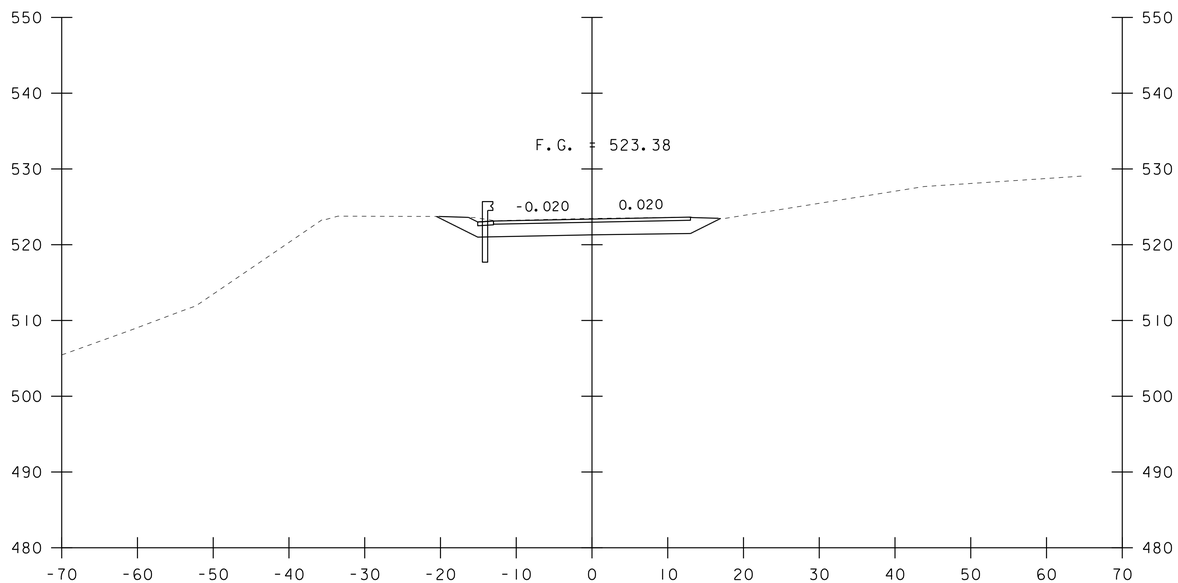

52+00

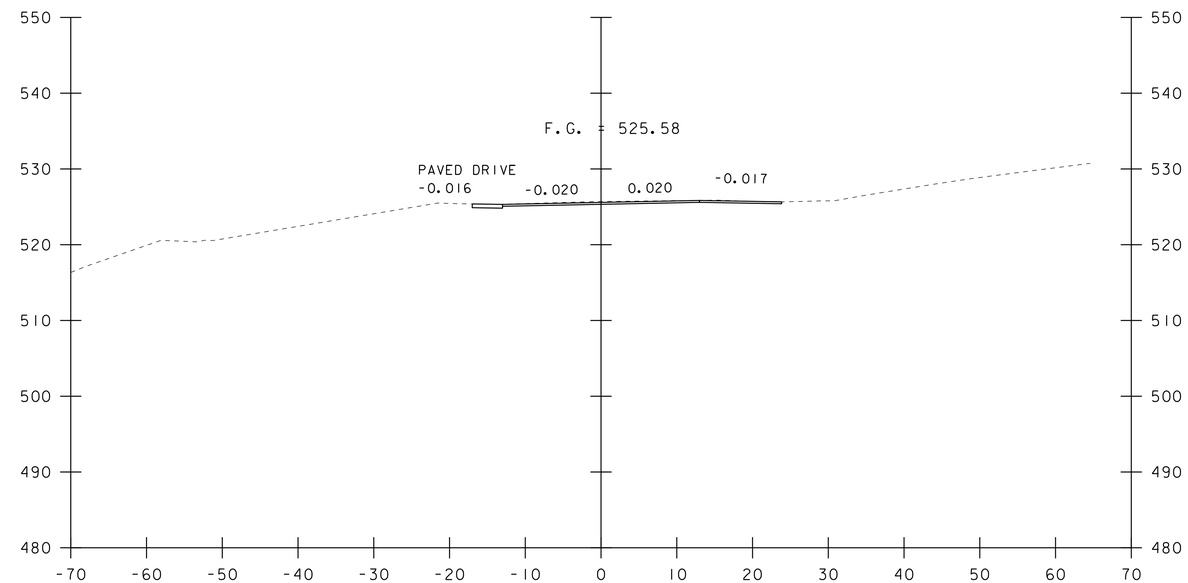

END PROJECT STA 52+50

52+50

STA. 52+00 TO STA. 52+75

PROJECT NAME: NEWFANE	
PROJECT NUMBER: BF 0106(6)	
FILE NAME: sl3j306xs.dgn	PLOT DATE: 08-SEP-2020
PROJECT LEADER: C. COTA	DRAWN BY: M. LONGSTREET
DESIGNED BY: C. BURRALL	CHECKED BY: C. BURRALL
DEPOT RD (TH 2) CROSS SECTIONS 3	SHEET 37 OF 64

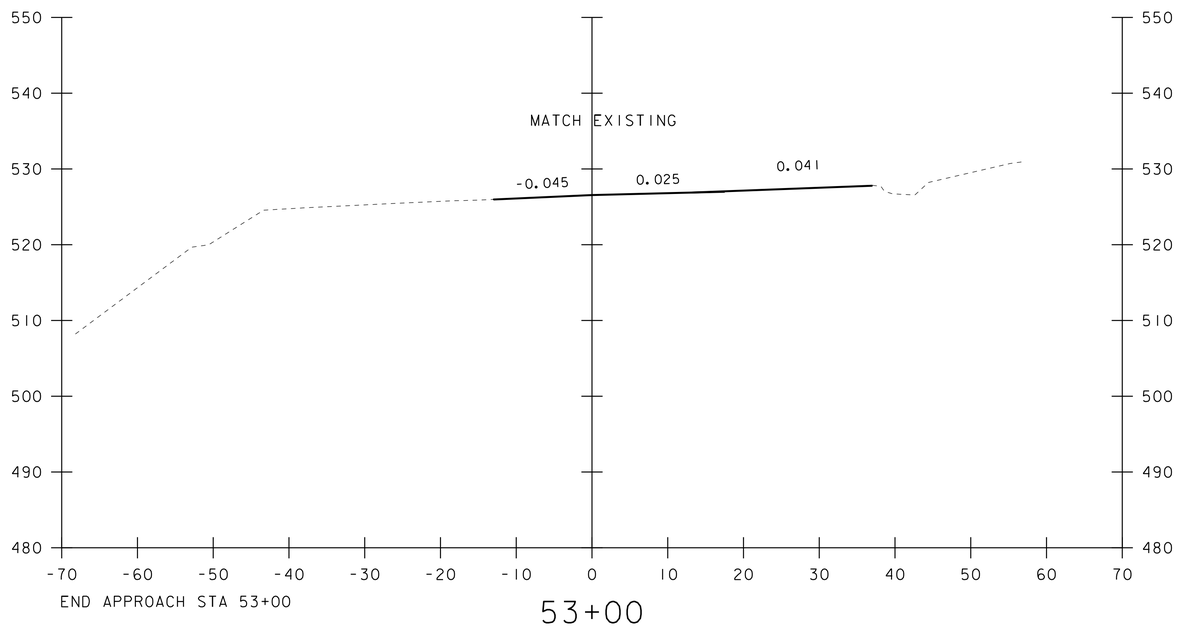

STA. 53+00 TO STA. 53+00

PROJECT NAME: NEWFANE	
PROJECT NUMBER: BF 0106(6)	
FILE NAME: sl3j306xs.dgn	PLOT DATE: 08-SEP-2020
PROJECT LEADER: C. COTA	DRAWN BY: M. LONGSTREET
DESIGNED BY: C. BURRALL	CHECKED BY: C. BURRALL
DEPOT RD (TH 2) CROSS SECTIONS 4	SHEET 38 OF 64

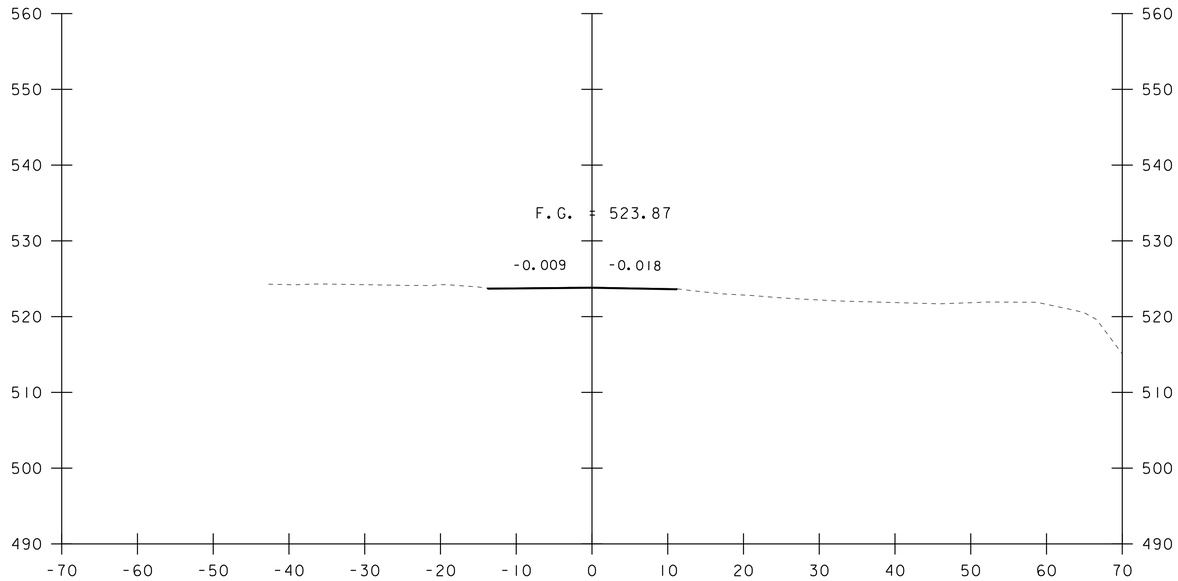

9+50

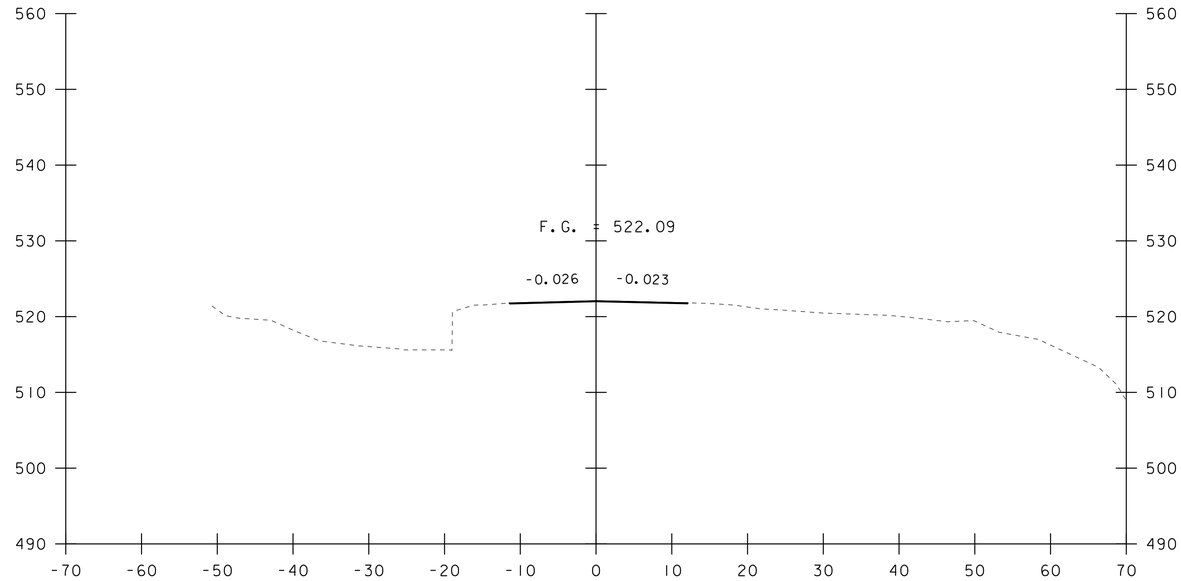

10+50

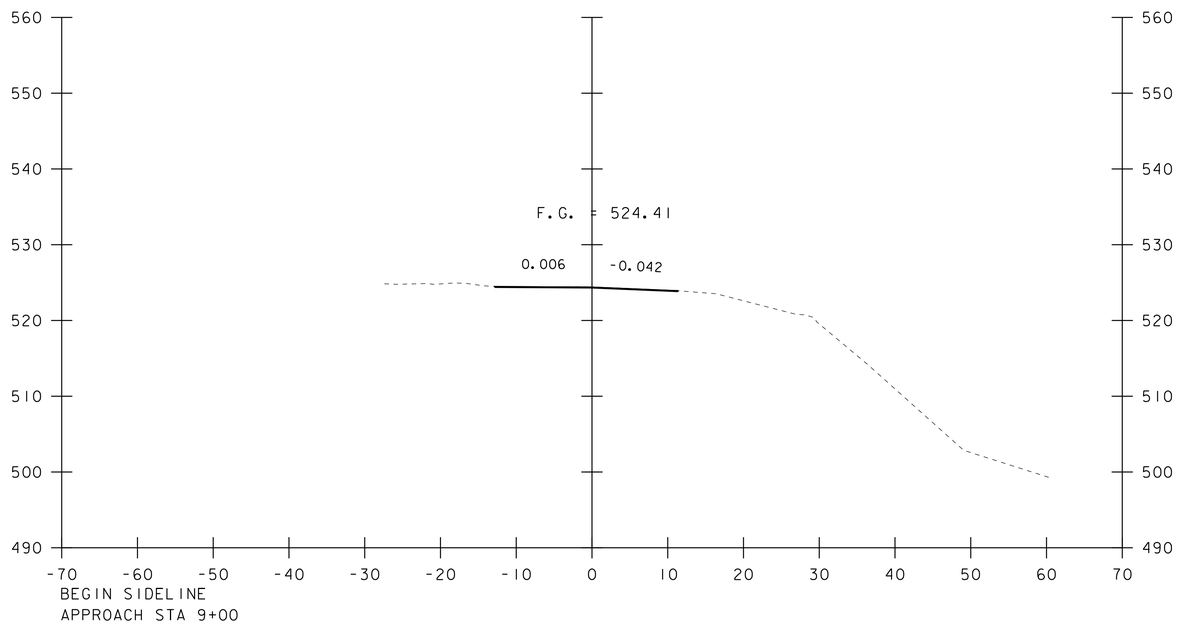

9+00

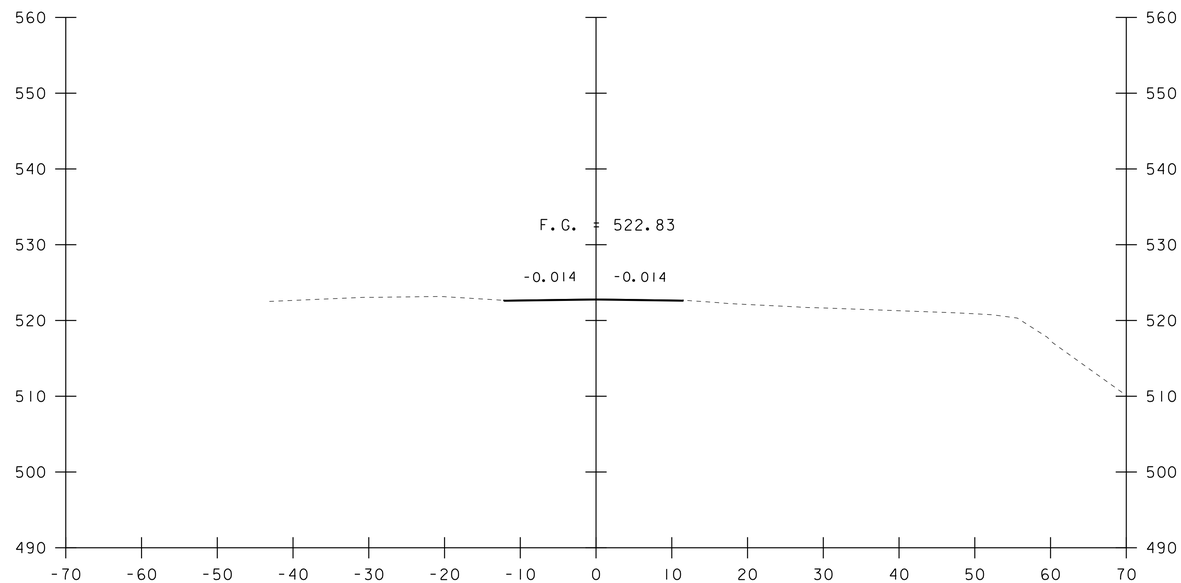

10+00

STA. 9+00 TO STA. 10+50

PROJECT NAME: NEWFANE	
PROJECT NUMBER: BF 0106(6)	
FILE NAME: sl3j306xs.dgn	PLOT DATE: 08-SEP-2020
PROJECT LEADER: C. COTA	DRAWN BY: M. LONGSTREET
DESIGNED BY: C. BURRALL	CHECKED BY: C. BURRALL
DOVER (TH 2)/GRIMES HILL (TH 5) SECTIONS I	SHEET 39 OF 64

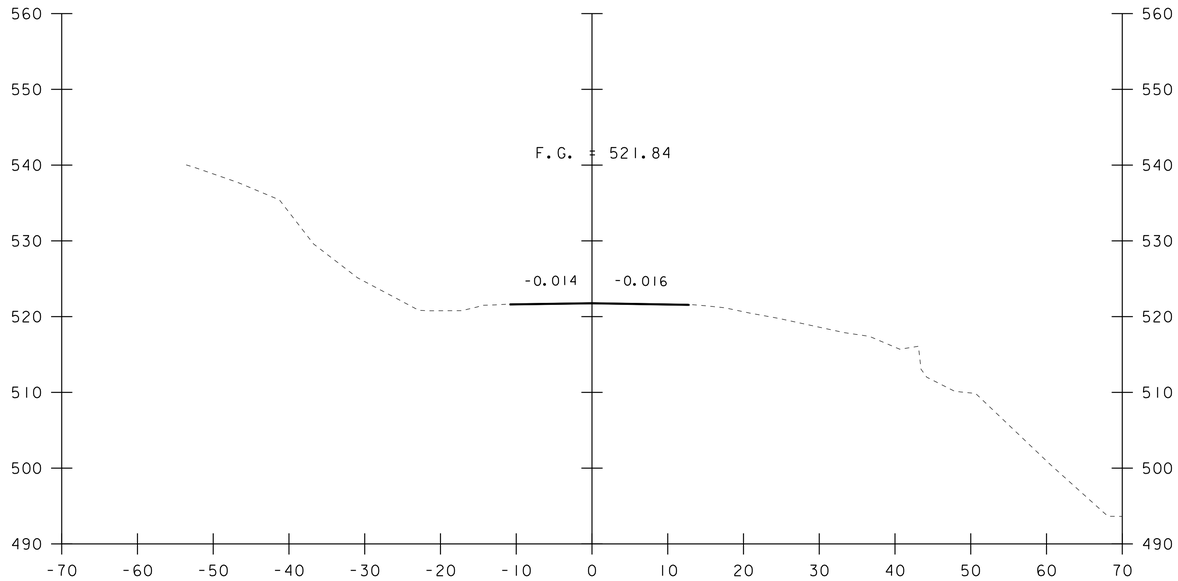

11+00

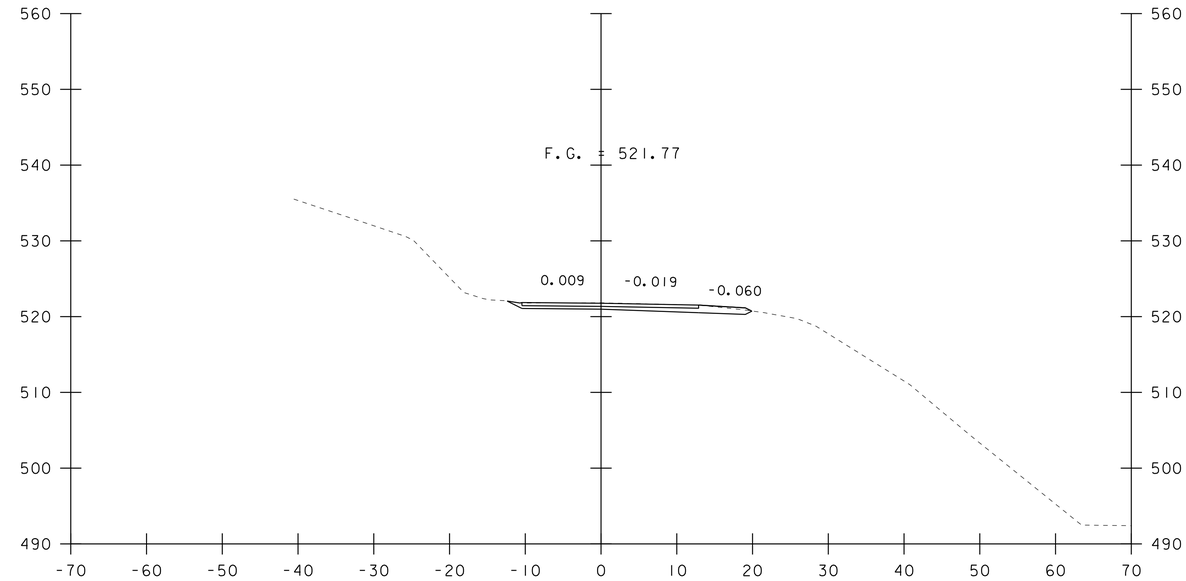

11+34

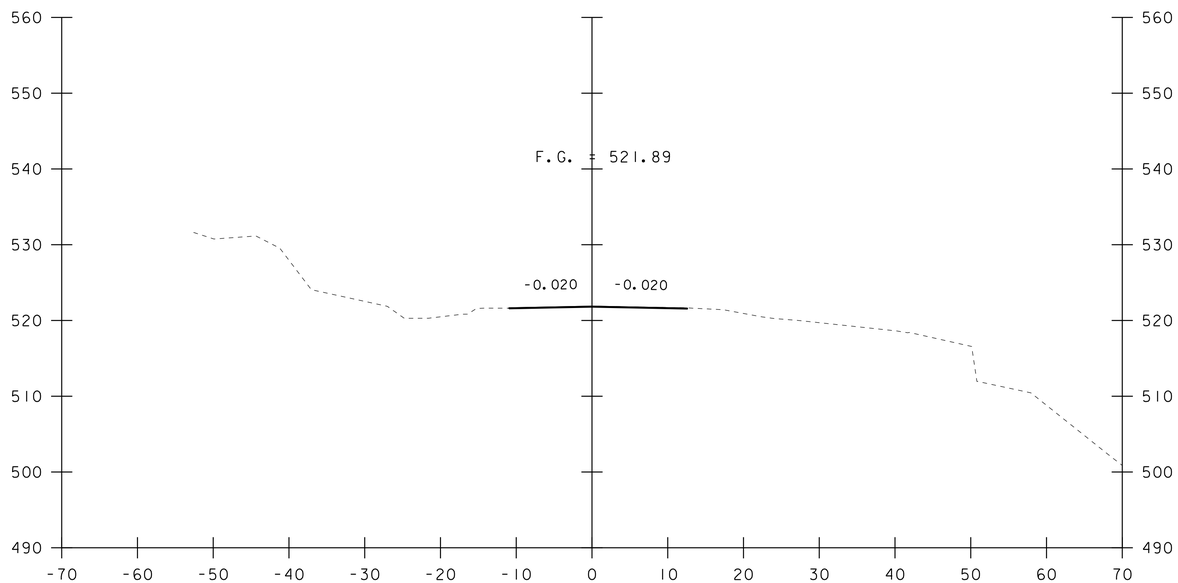

10+75

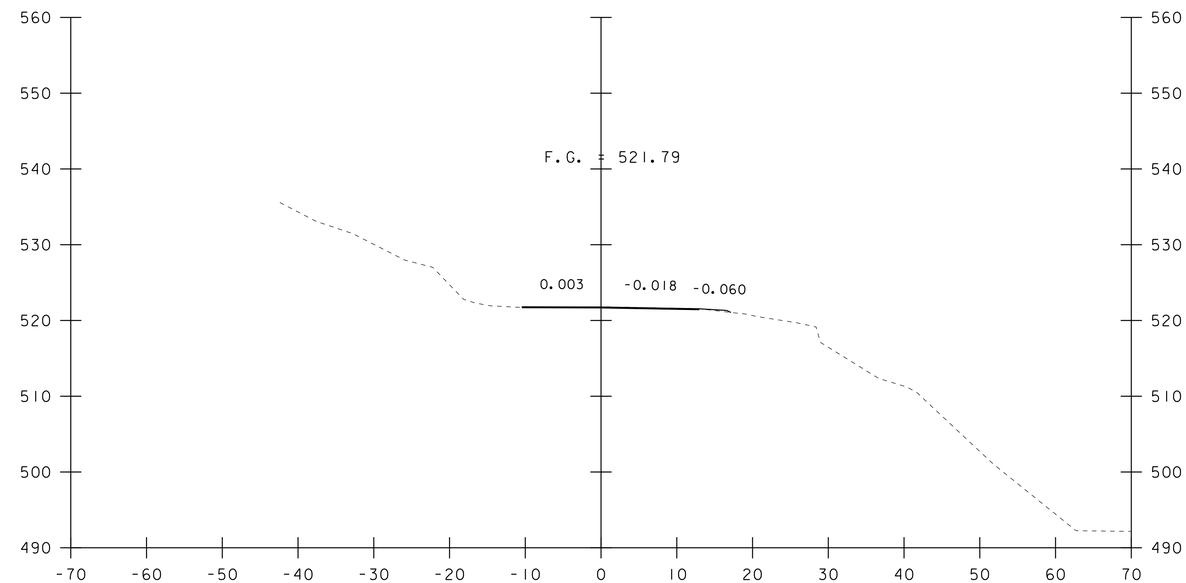

11+25

STA. 10+75 TO STA. 11+34

PROJECT NAME: NEWFANE	
PROJECT NUMBER: BF 0106(6)	
FILE NAME: sl3j306xs.dgn	PLOT DATE: 08-SEP-2020
PROJECT LEADER: C. COTA	DRAWN BY: M. LONGSTREET
DESIGNED BY: C. BURRALL	CHECKED BY: C. BURRALL
DOVER (TH 2)/GRIMES HILL (TH 5) SECTIONS 2	SHEET 40 OF 64

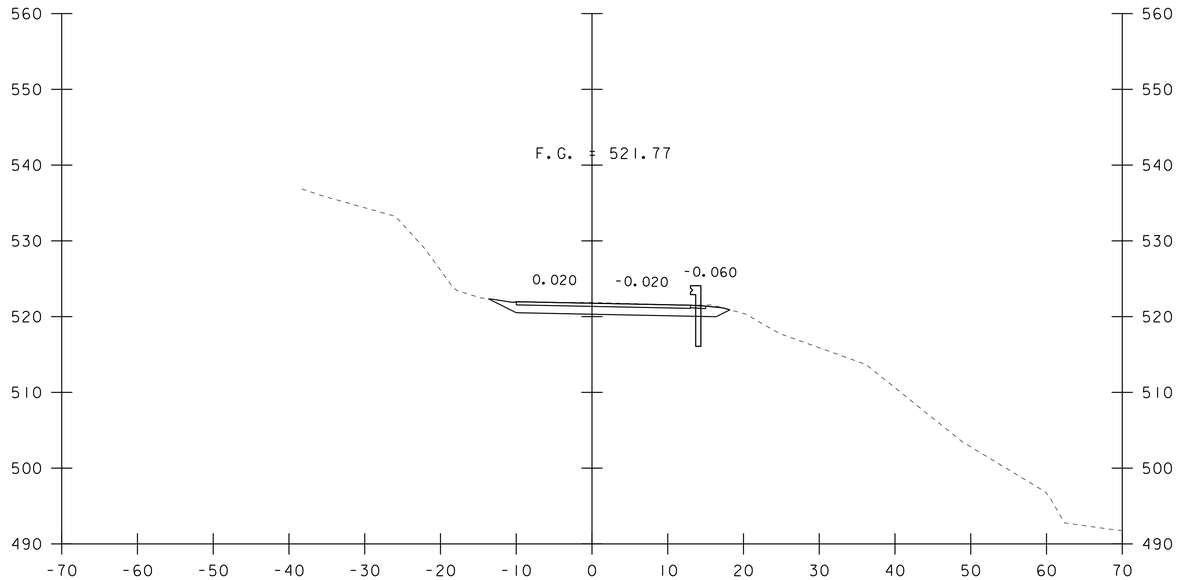

11+50

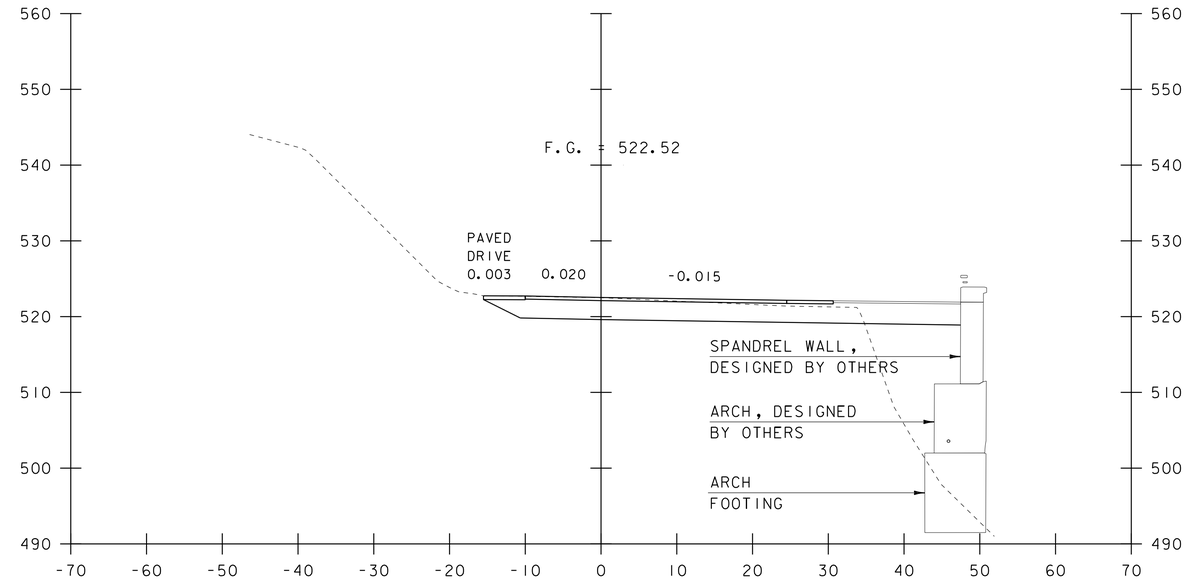

12+00

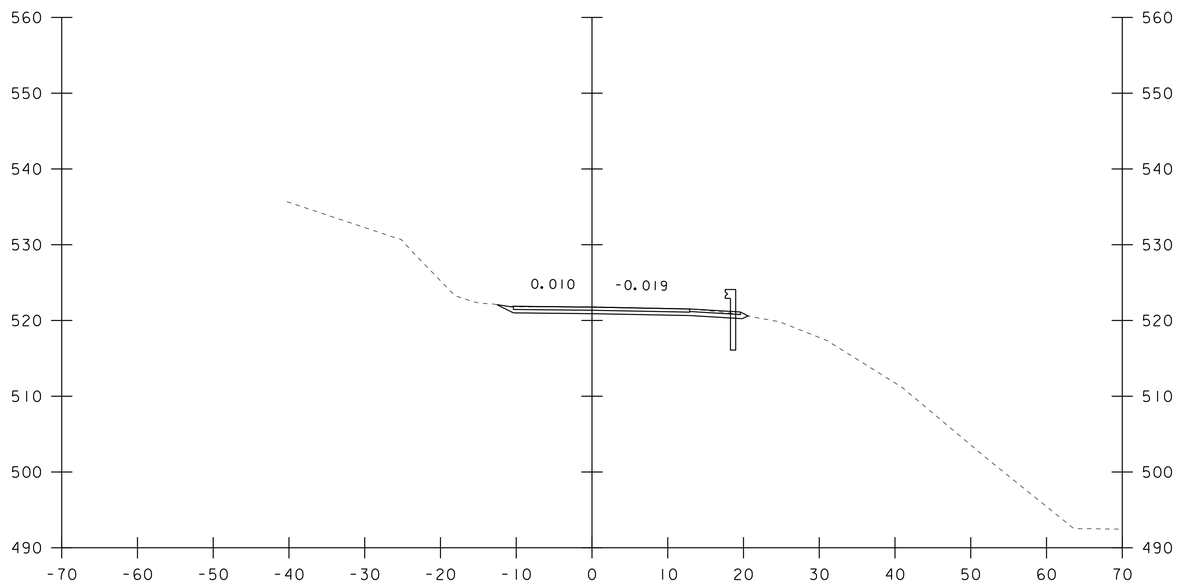

11+36

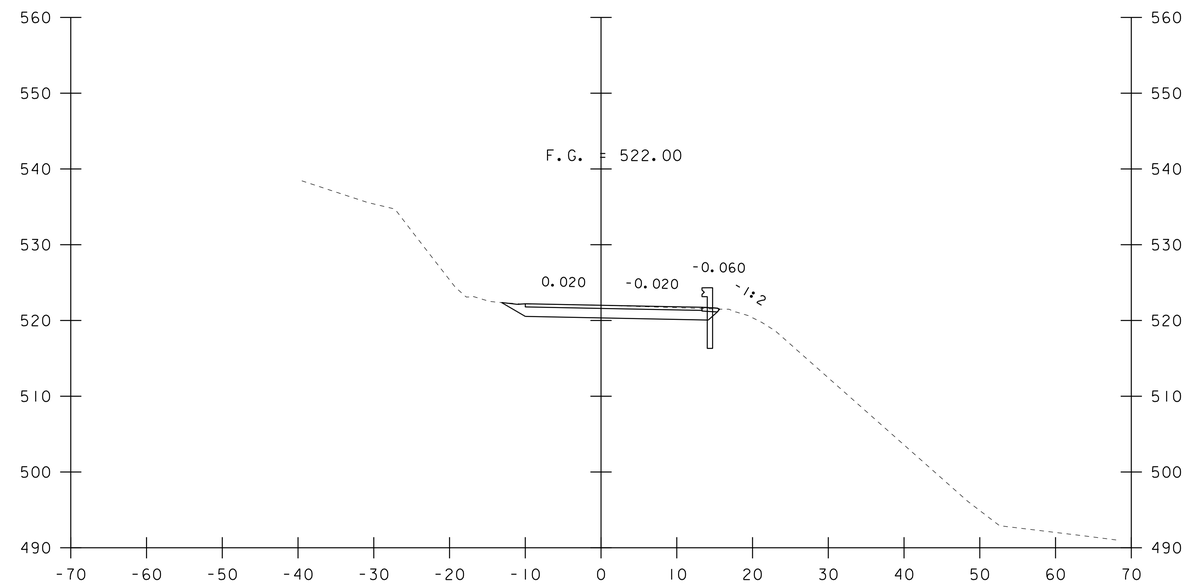

11+75

STA. 11+36 TO STA. 12+00

PROJECT NAME: NEWFANE	
PROJECT NUMBER: BF 0106(6)	
FILE NAME: sl3j306xs.dgn	PLOT DATE: 08-SEP-2020
PROJECT LEADER: C. COTA	DRAWN BY: M. LONGSTREET
DESIGNED BY: C. BURRALL	CHECKED BY: C. BURRALL
DOVER (TH 2)/GRIMES HILL (TH 5) SECTIONS 3	SHEET 41 OF 64

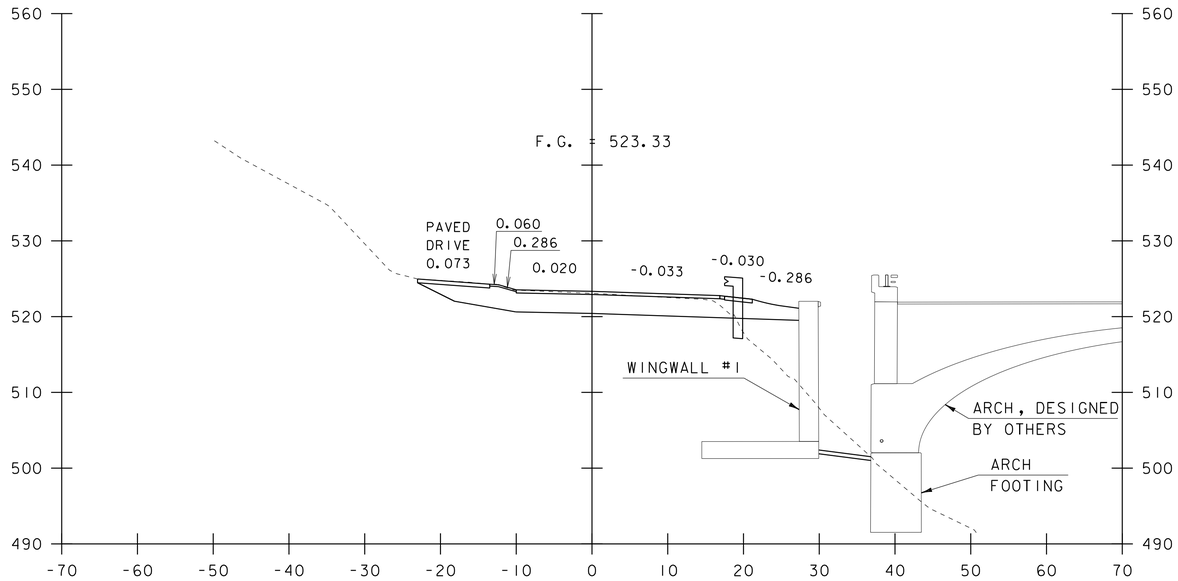

12+25

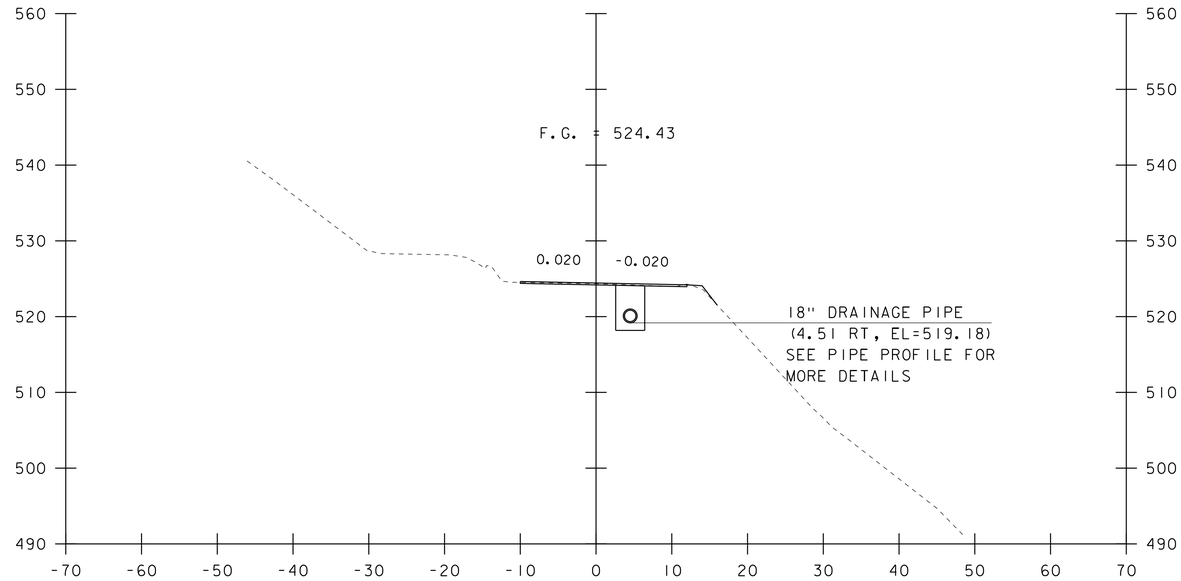

12+50

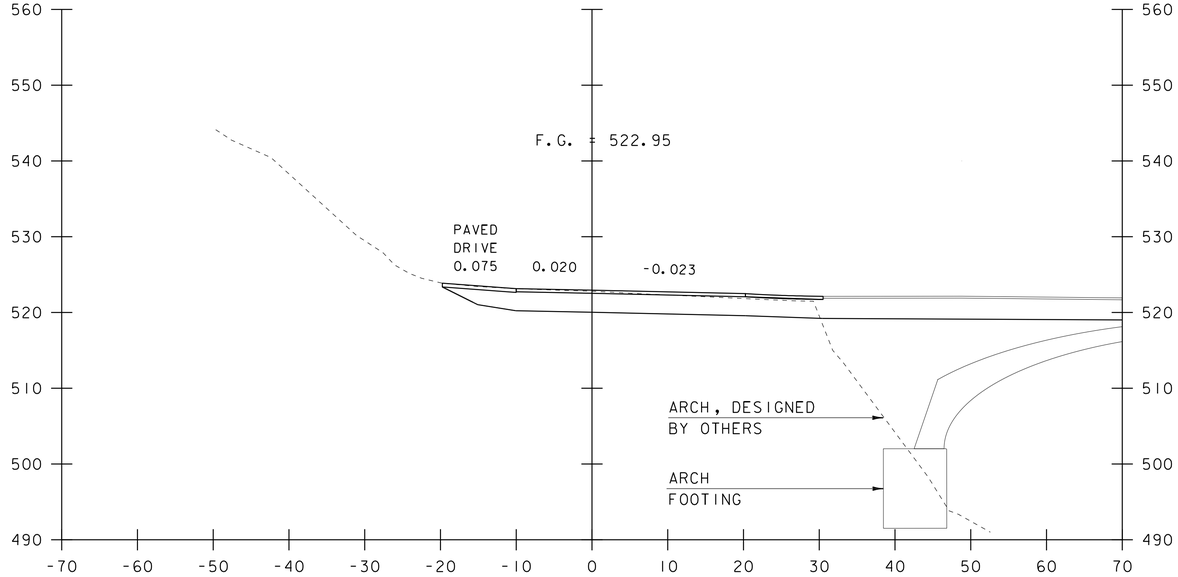

12+14

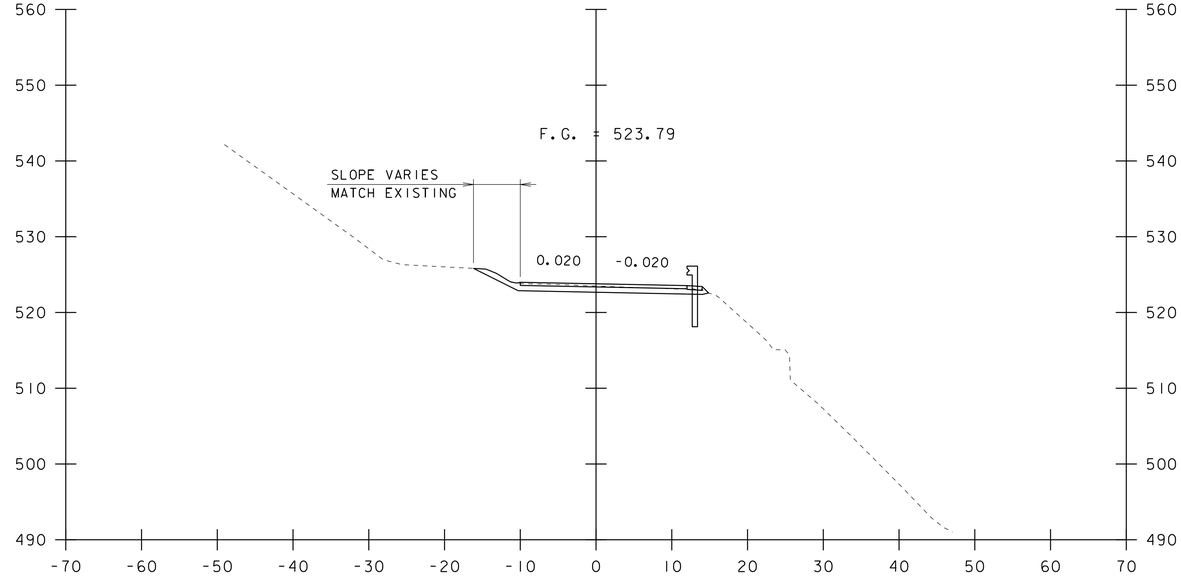

12+36

STA. 12+14 TO STA. 12+50

PROJECT NAME: NEWFANE	
PROJECT NUMBER: BF 0106(6)	
FILE NAME: sl3j306xs.dgn	PLOT DATE: 08-SEP-2020
PROJECT LEADER: C. COTA	DRAWN BY: M. LONGSTREET
DESIGNED BY: C. BURRALL	CHECKED BY: C. BURRALL
DOVER (TH 2)/GRIMES HILL (TH 5) SECTIONS 4	SHEET 42 OF 64

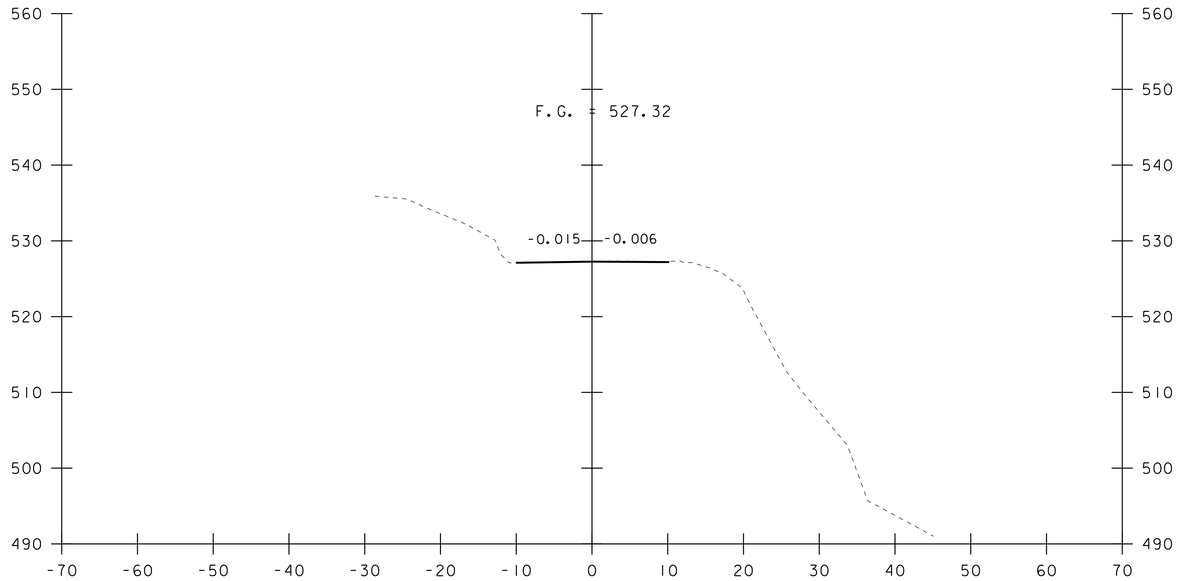

13+00

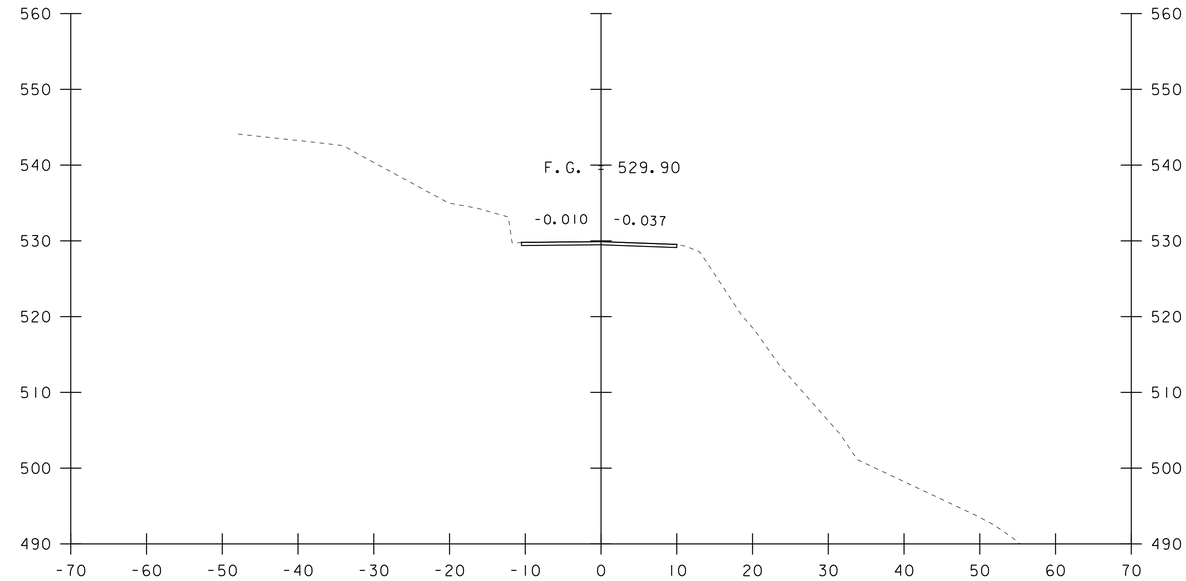

END SIDELINE
APPROACH STA 14+00

14+00

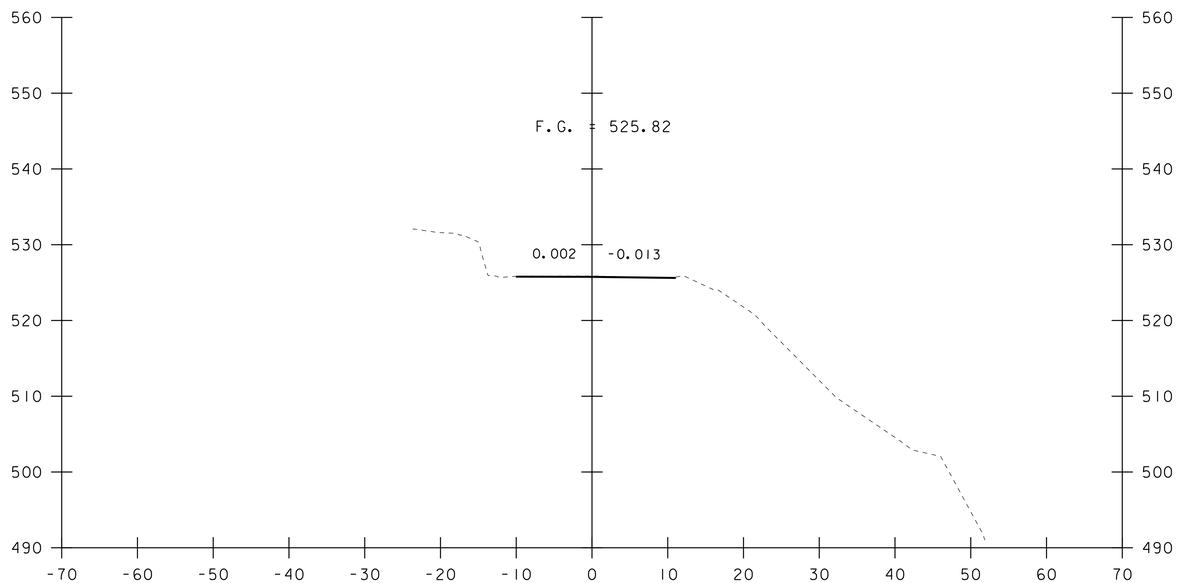

12+75

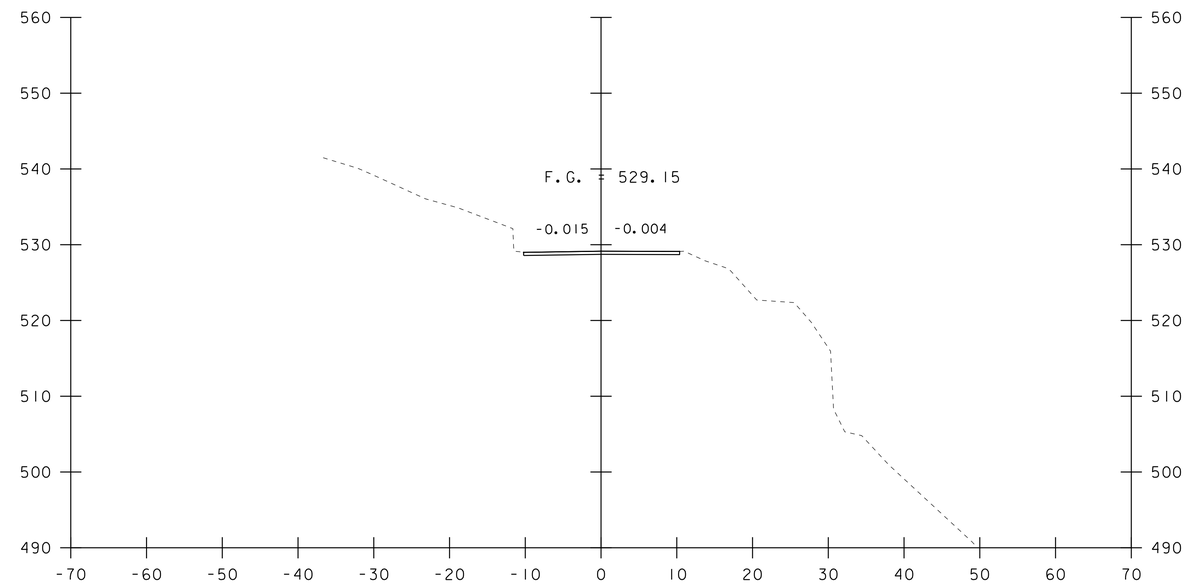

13+50

STA. 12+75 TO STA. 14+00

PROJECT NAME: NEWFANE	
PROJECT NUMBER: BF 0106(6)	
FILE NAME: sl3j306xs.dgn	PLOT DATE: 08-SEP-2020
PROJECT LEADER: C. COTA	DRAWN BY: M. LONGSTREET
DESIGNED BY: C. BURRALL	CHECKED BY: C. BURRALL
DOVER (TH 2)/GRIMES HILL (TH 5) SECTIONS 5	SHEET 43 OF 64

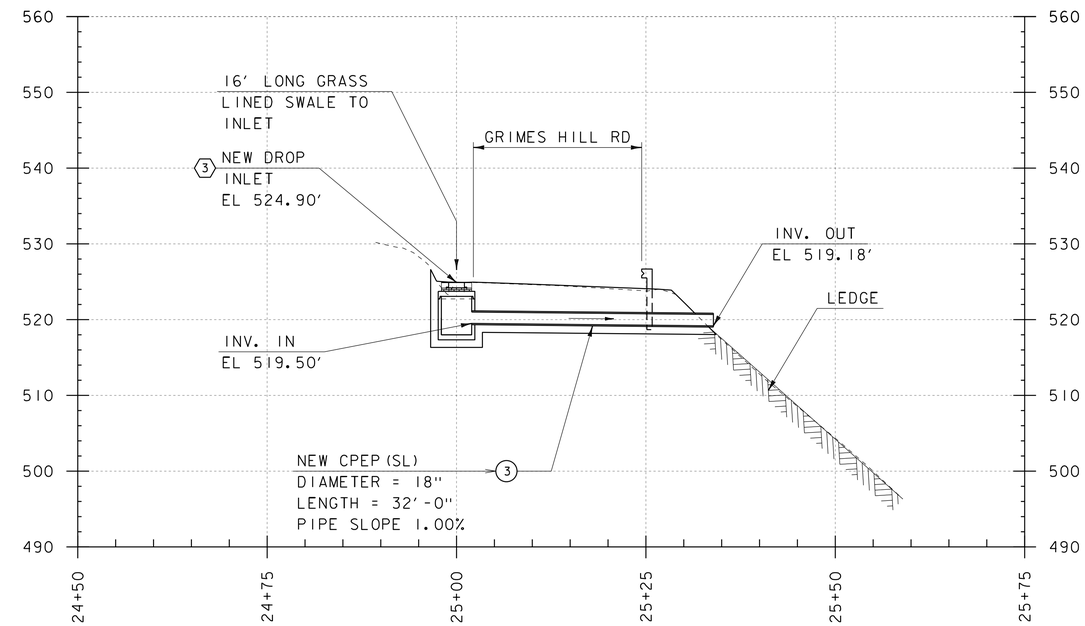

GRIMES HILL RD
INLET #3 AND PIPE #3 PROFILE

NOTE:

SEE "DEPOT RD (TH 2) CROSS SECTIONS 2" STA 51+50
FOR INLET 1-2 AND PIPE 1-2 PROFILE DETAILS.

PROJECT NAME: NEWFANE	
PROJECT NUMBER: BF 0106(6)	
FILE NAME: sl3j306xs.dgn	PLOT DATE: 08-SEP-2020
PROJECT LEADER: C. COTA	DRAWN BY: M. LONGSTREET
DESIGNED BY: C. BURRALL	CHECKED BY: C. BURRALL
DROP INLET #3 & PIPE #3 PROFILE	SHEET 44 OF 64

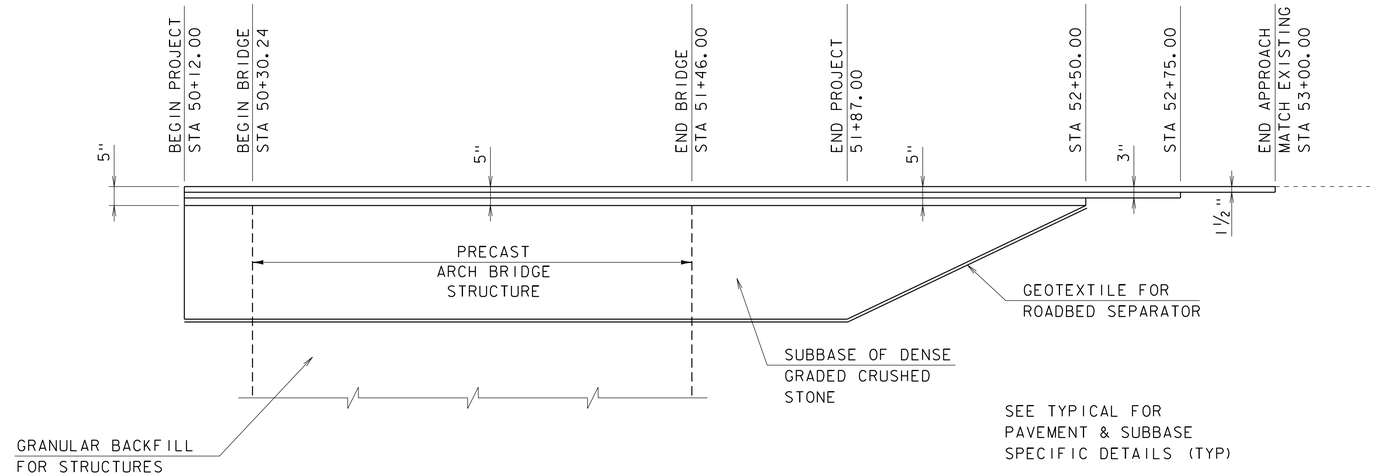

DEPOT RD (TH 2) MATERIAL TRANSITION DETAIL

HORIZONTAL SCALE: 1" = 20'-0"
NO VERTICAL SCALE

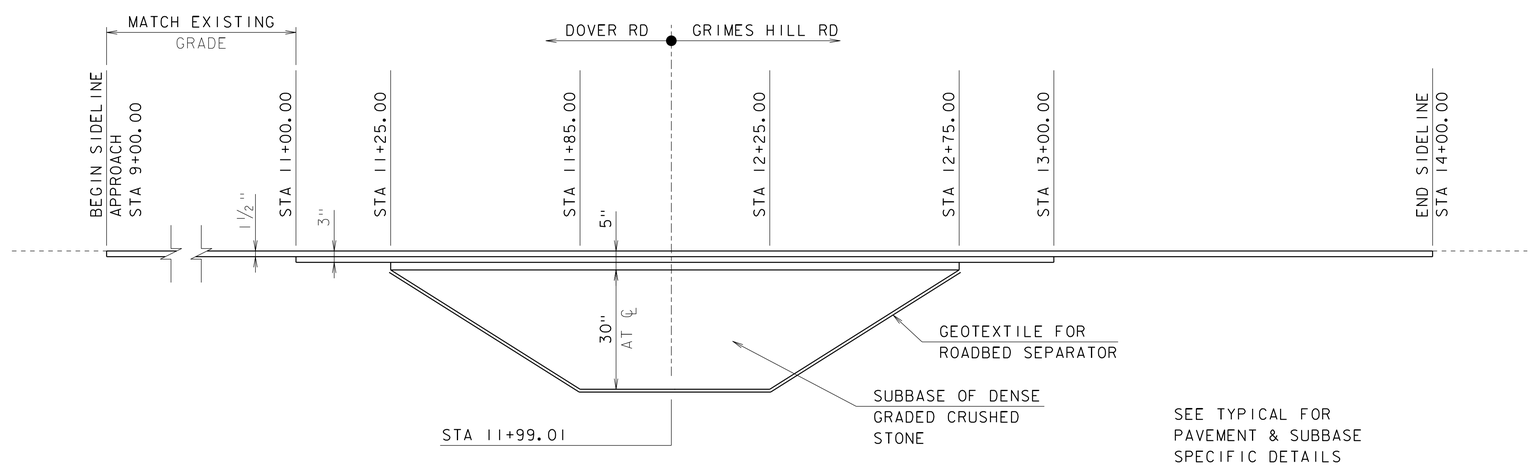

DOVER RD (TH 2) & GRIMES HILL RD (TH 5) MATERIAL TRANSITION DETAIL

HORIZONTAL SCALE: 1" = 20'-0"
NO VERTICAL SCALE

PROJECT NAME: NEWFANE	
PROJECT NUMBER: BF 0106(6)	
FILE NAME: sl3j306profile.dgn	PLOT DATE: 08-SEP-2020
PROJECT LEADER: C. COTA	DRAWN BY: M. LONGSTREET
DESIGNED BY: C. BURRALL	CHECKED BY: C. BURRALL
MATERIAL TRANSITION DETAILS	SHEET 45 OF 64

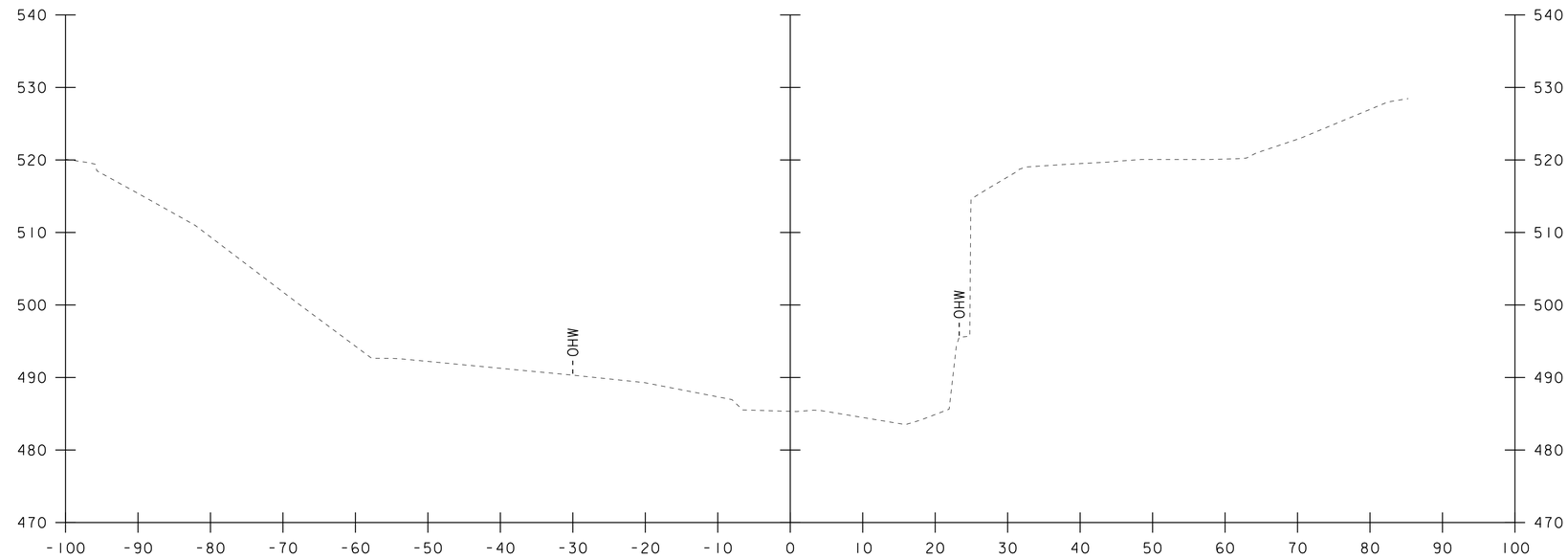

30+25

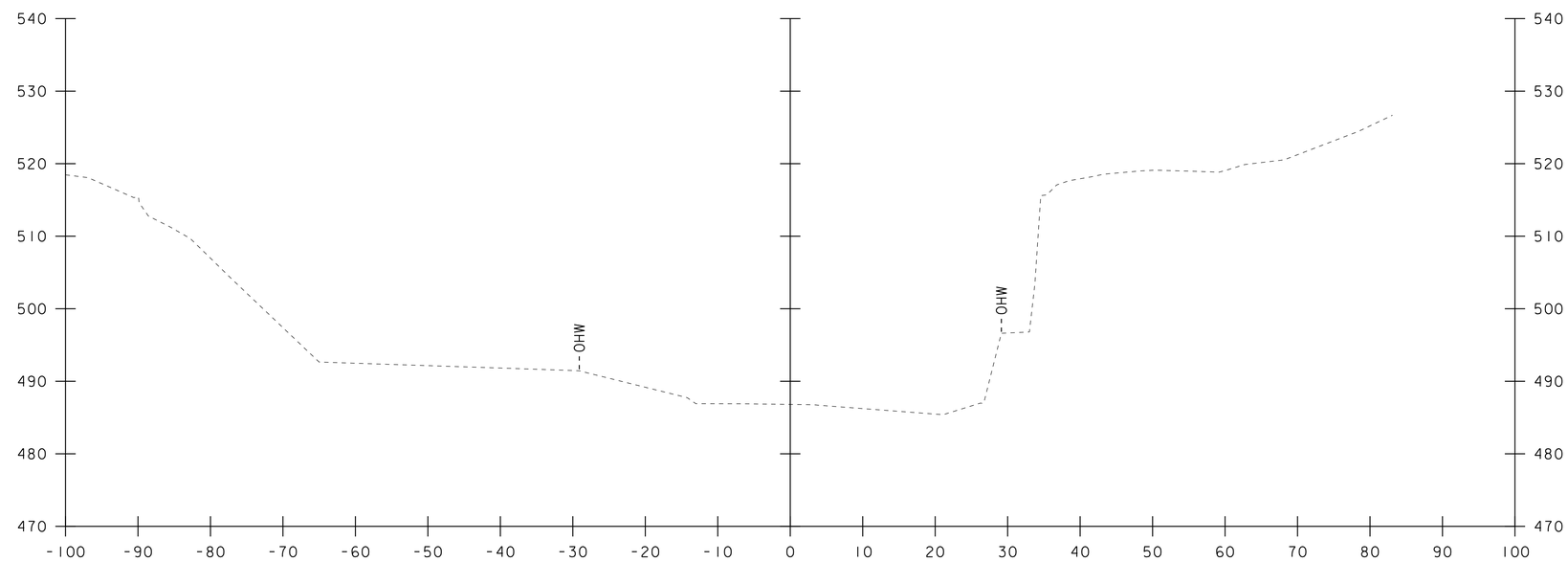

30+00

STA. 30+00 TO STA. 30+25

PROJECT NAME: NEWFANE	
PROJECT NUMBER: BF 0106(6)	
FILE NAME: sl3j306xs.dgn	PLOT DATE: 08-SEP-2020
PROJECT LEADER: C. COTA	DRAWN BY: M. LONGSTREET
DESIGNED BY: C. BURRALL	CHECKED BY: C. BURRALL
CHANNEL CROSS SECTIONS 1	SHEET 46 OF 64

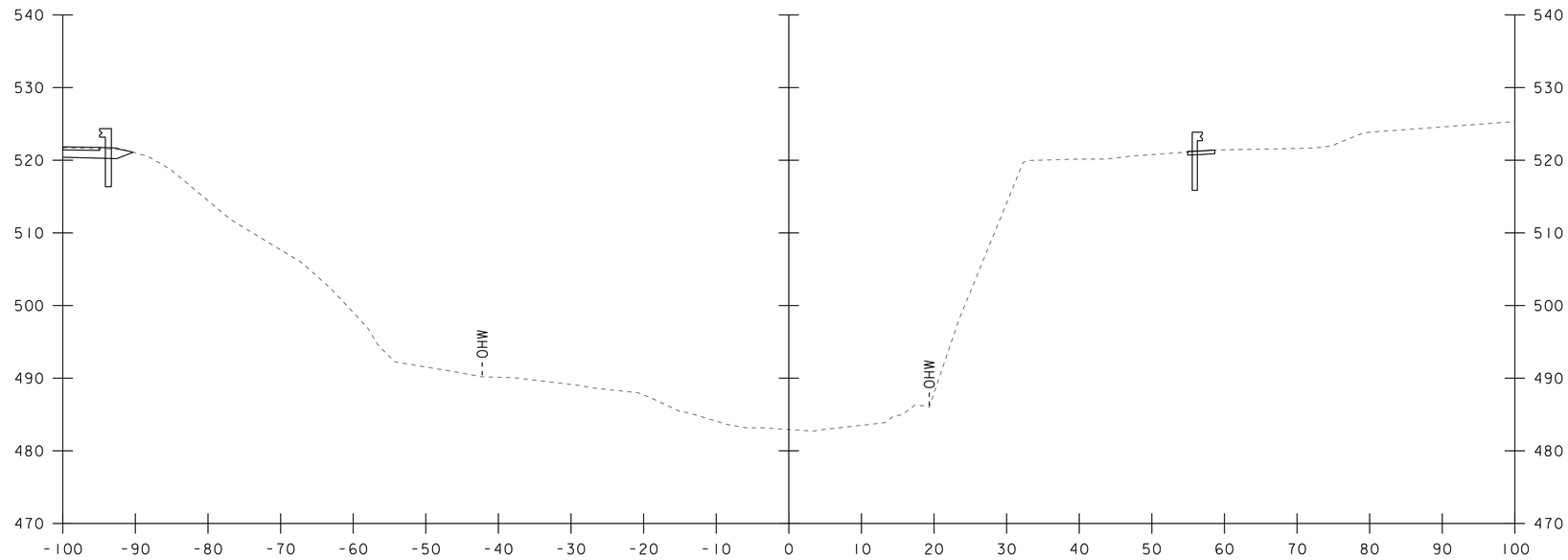

30+75

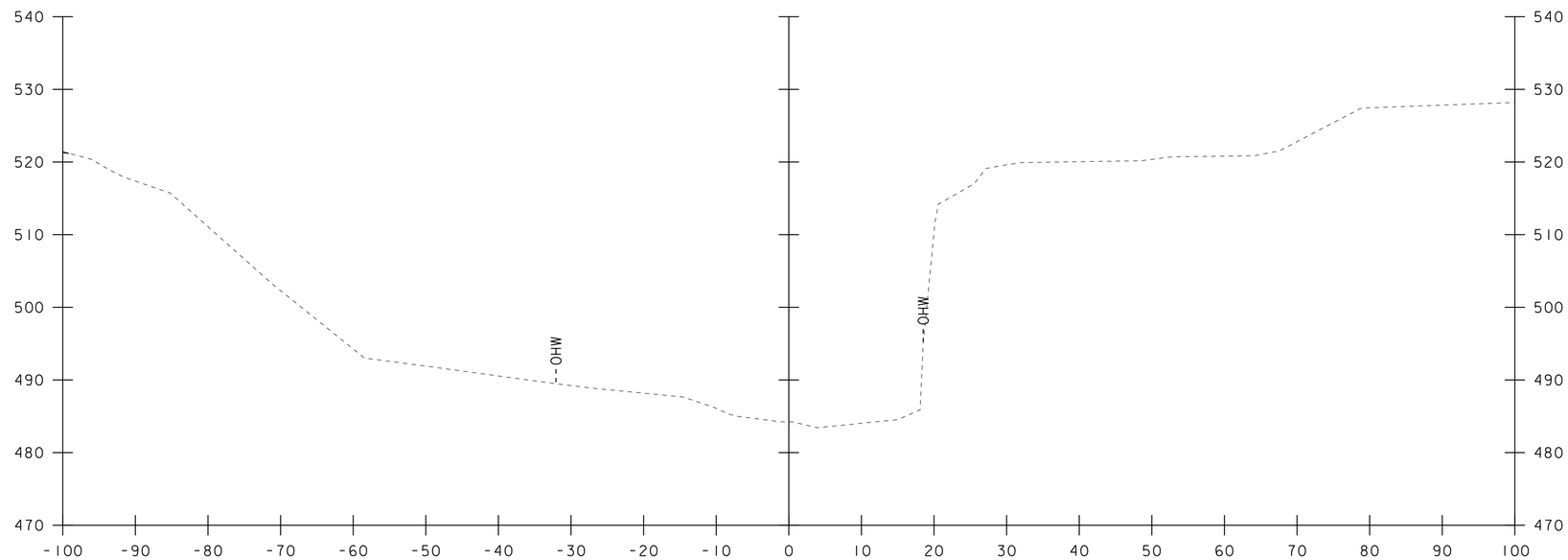

30+50

STA. 30+50 TO STA. 30+75

PROJECT NAME: NEWFANE	
PROJECT NUMBER: BF 0106(6)	
FILE NAME: sl3j306xs.dgn	PLOT DATE: 08-SEP-2020
PROJECT LEADER: C. COTA	DRAWN BY: M. LONGSTREET
DESIGNED BY: C. BURRALL	CHECKED BY: C. BURRALL
CHANNEL CROSS SECTIONS 2	SHEET 47 OF 64

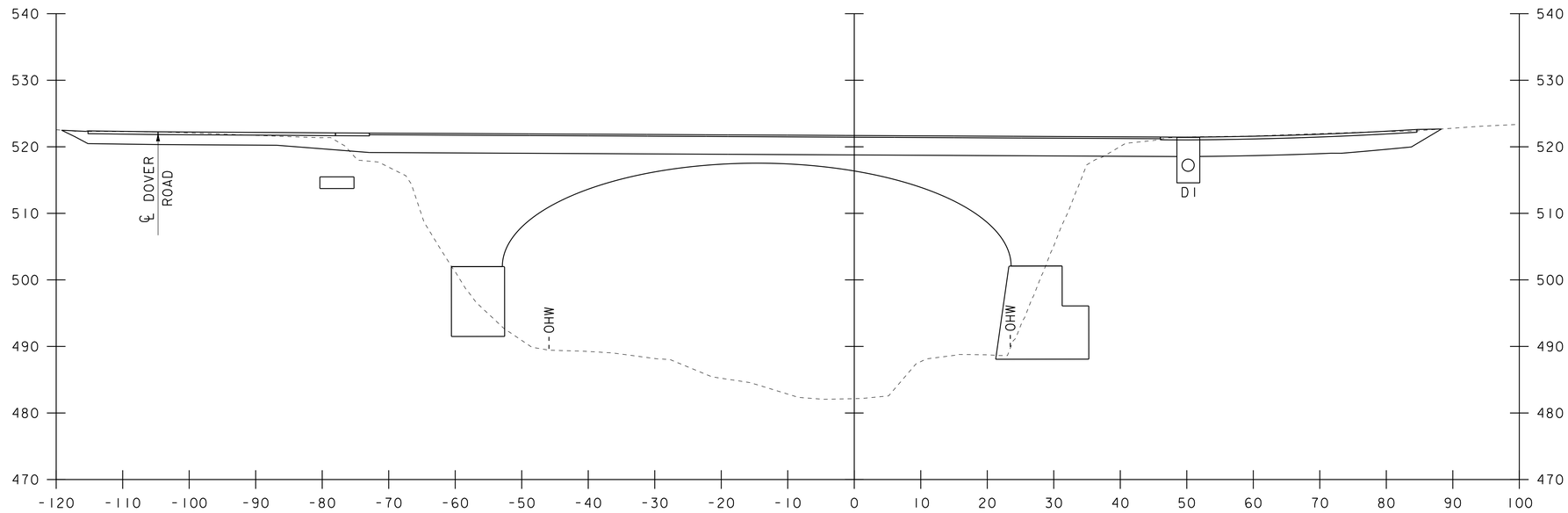

30+90

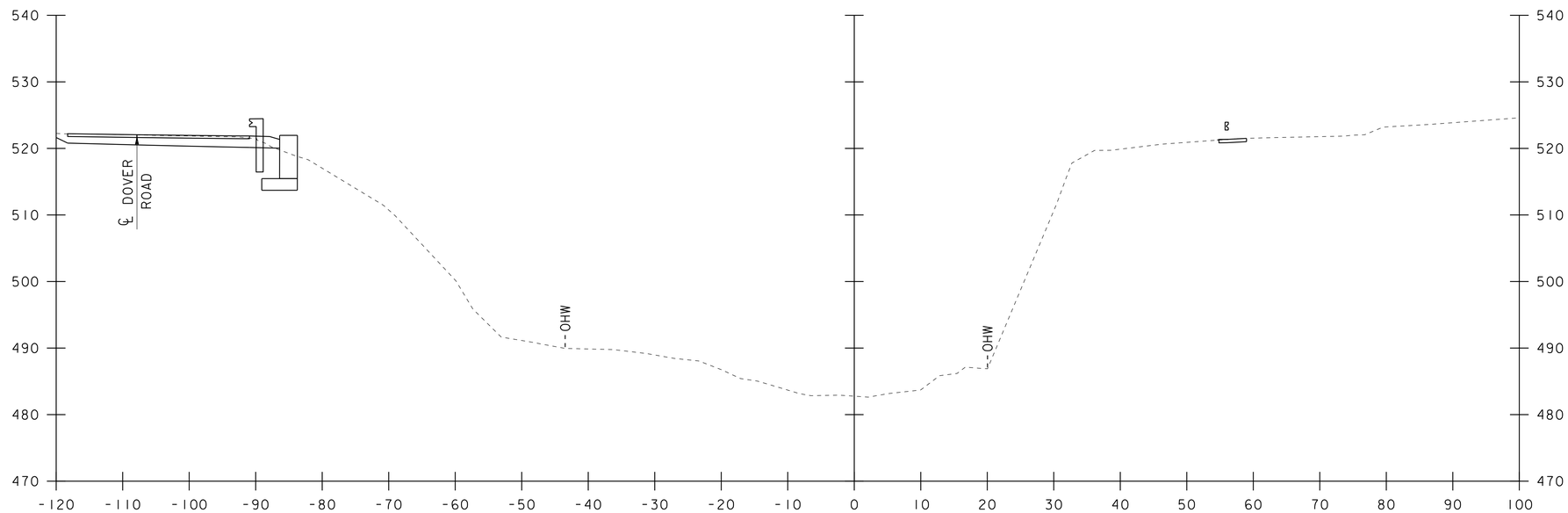

30+80

STA. 30+80 TO STA. 30+90

PROJECT NAME: NEWFANE	
PROJECT NUMBER: BF 0106(6)	
FILE NAME: sl3j306xs.dgn	PLOT DATE: 08-SEP-2020
PROJECT LEADER: C. COTA	DRAWN BY: M. LONGSTREET
DESIGNED BY: C. BURRALL	CHECKED BY: C. BURRALL
CHANNEL CROSS SECTIONS 3	SHEET 48 OF 64

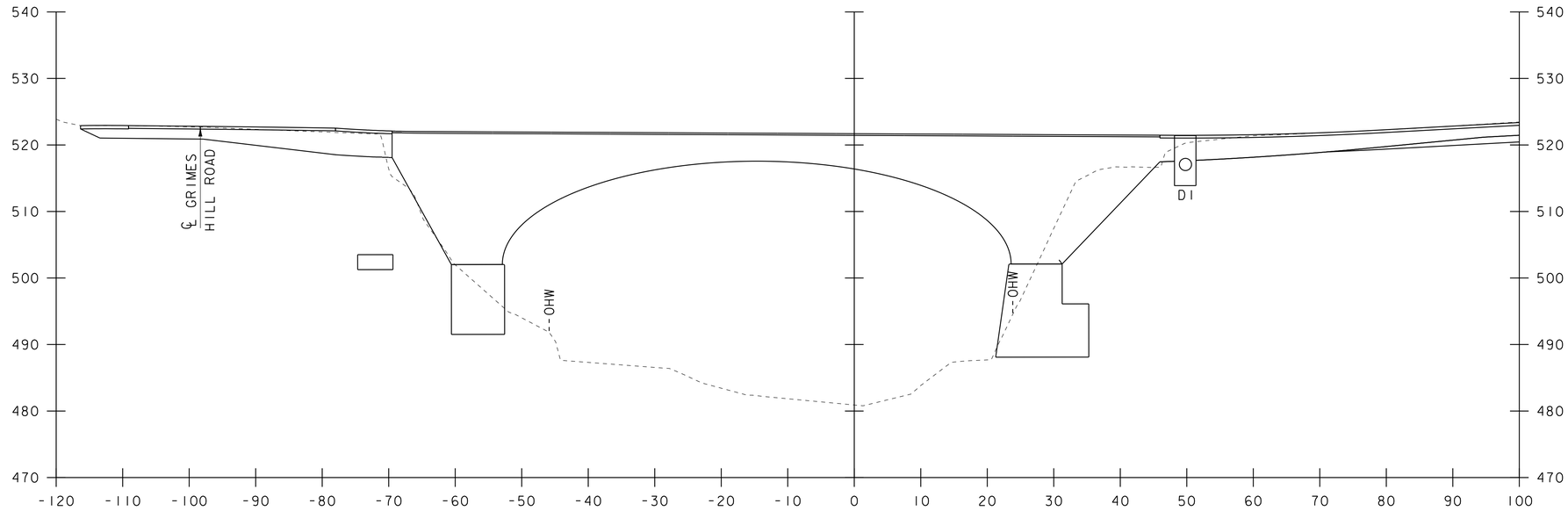

31+10

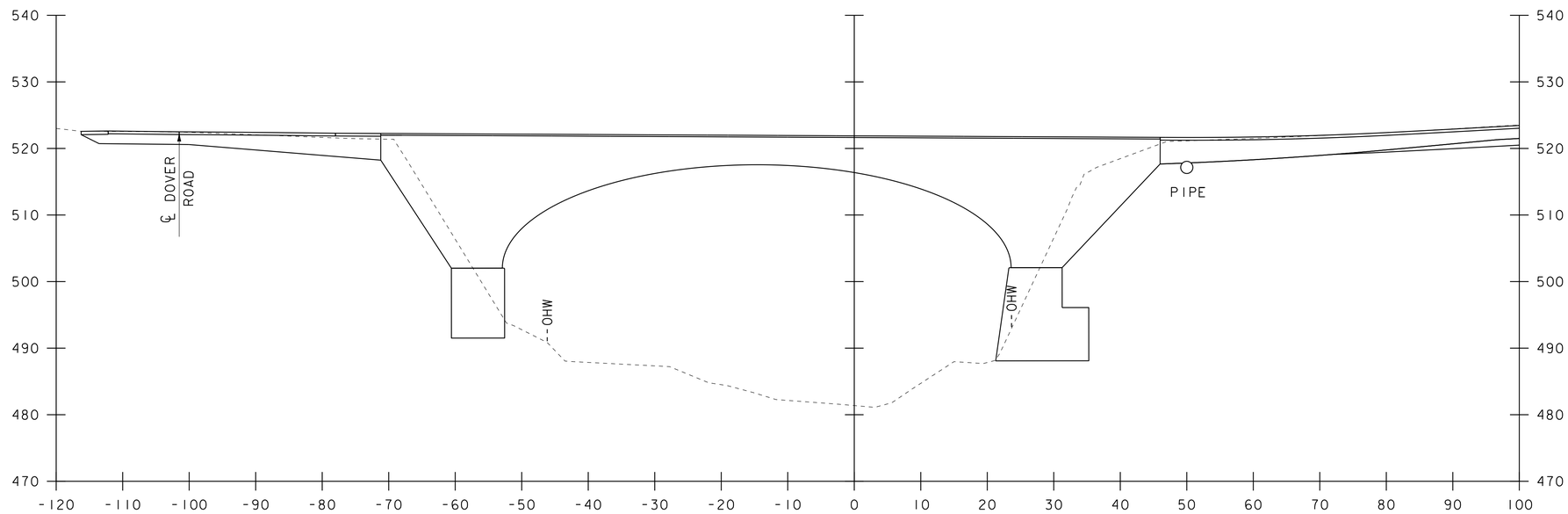

31+00

STA. 31+00 TO STA. 31+10

PROJECT NAME: NEWFANE	
PROJECT NUMBER: BF 0106(6)	
FILE NAME: sl3j306xs.dgn	PLOT DATE: 08-SEP-2020
PROJECT LEADER: C. COTA	DRAWN BY: M. LONGSTREET
DESIGNED BY: C. BURRALL	CHECKED BY: C. BURRALL
CHANNEL CROSS SECTIONS 4	SHEET 49 OF 64

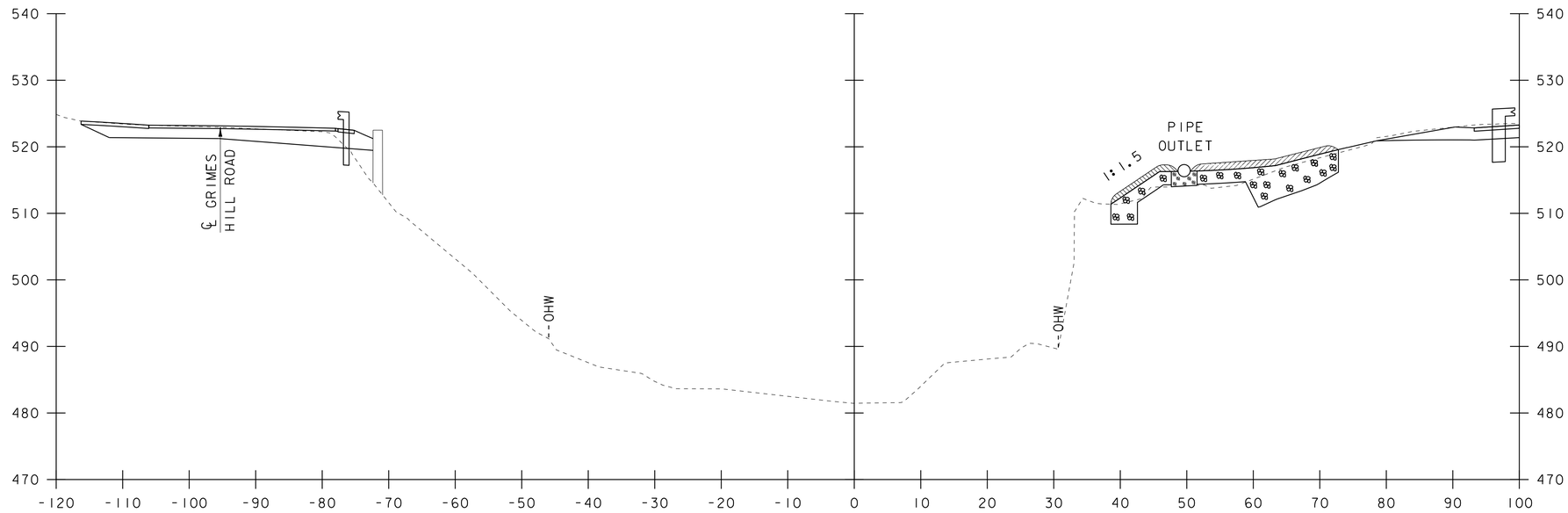

31+20

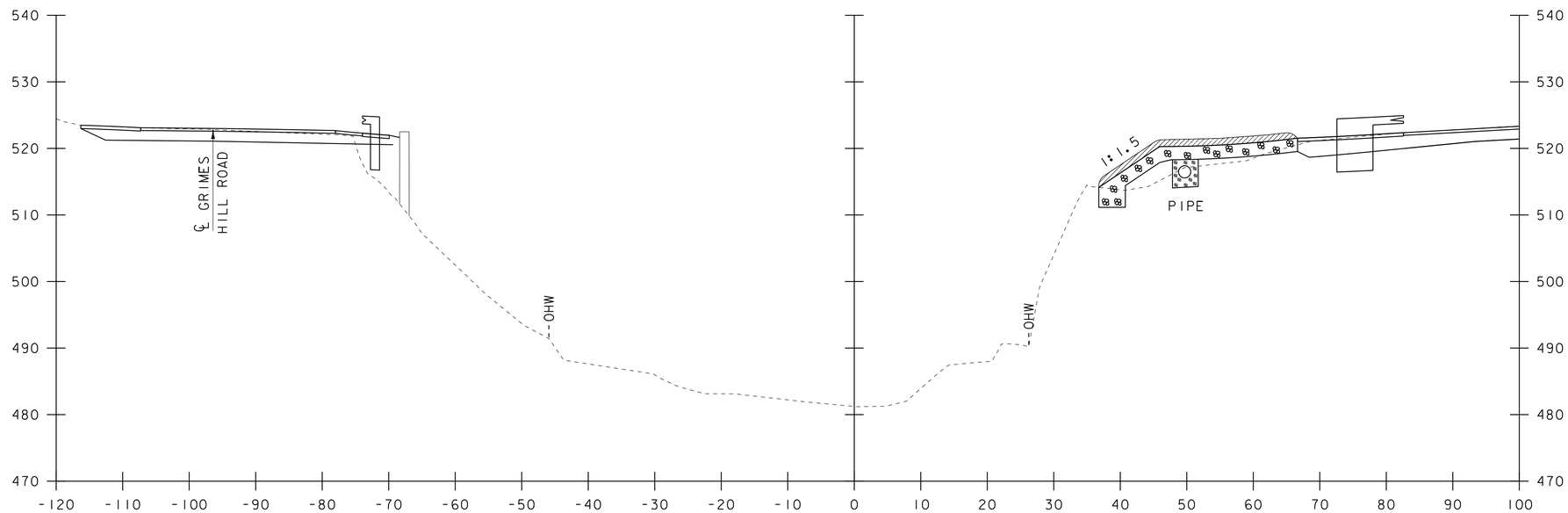

31+16

STA. 31+16 TO STA. 31+20

PROJECT NAME: NEWFANE	
PROJECT NUMBER: BF 0106(6)	
FILE NAME: sl3j306xs.dgn	PLOT DATE: 08-SEP-2020
PROJECT LEADER: C. COTA	DRAWN BY: M. LONGSTREET
DESIGNED BY: C. BURRALL	CHECKED BY: C. BURRALL
CHANNEL CROSS SECTIONS 5	SHEET 50 OF 64

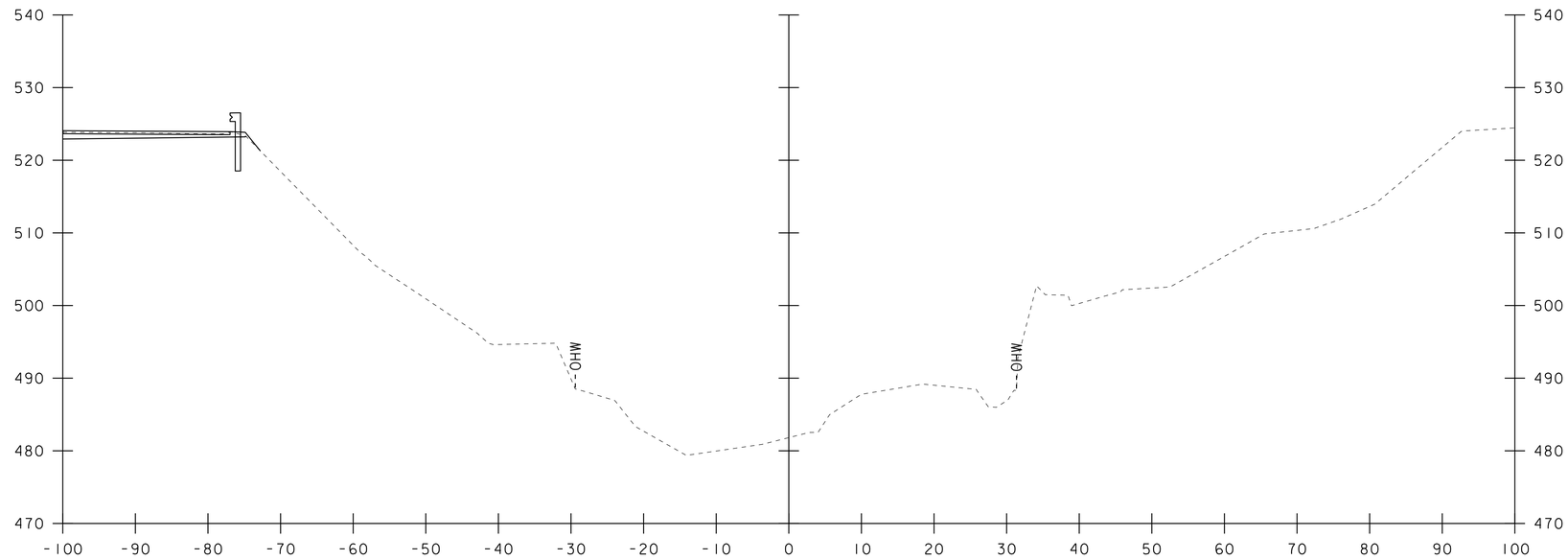

31+40

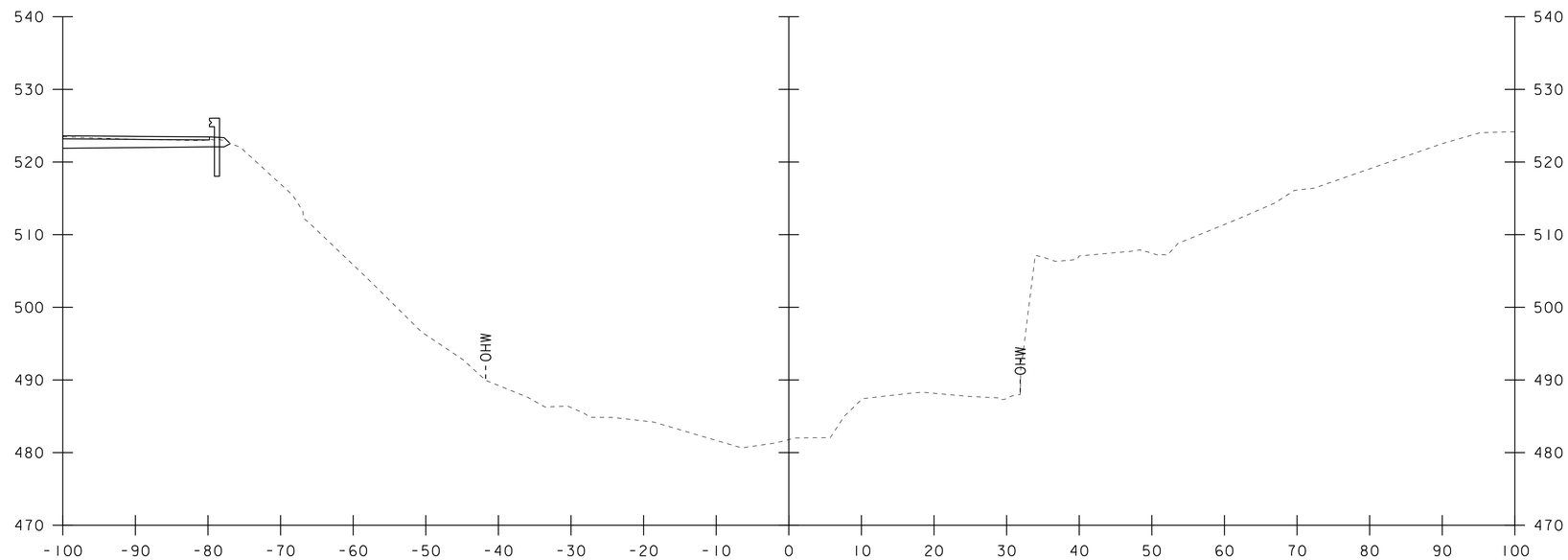

31+30

STA. 31+30 TO STA. 31+40

PROJECT NAME: NEWFANE	
PROJECT NUMBER: BF 0106(6)	
FILE NAME: sl3j306xs.dgn	PLOT DATE: 08-SEP-2020
PROJECT LEADER: C. COTA	DRAWN BY: M. LONGSTREET
DESIGNED BY: C. BURRALL	CHECKED BY: C. BURRALL
CHANNEL CROSS SECTIONS 6	SHEET 51 OF 64

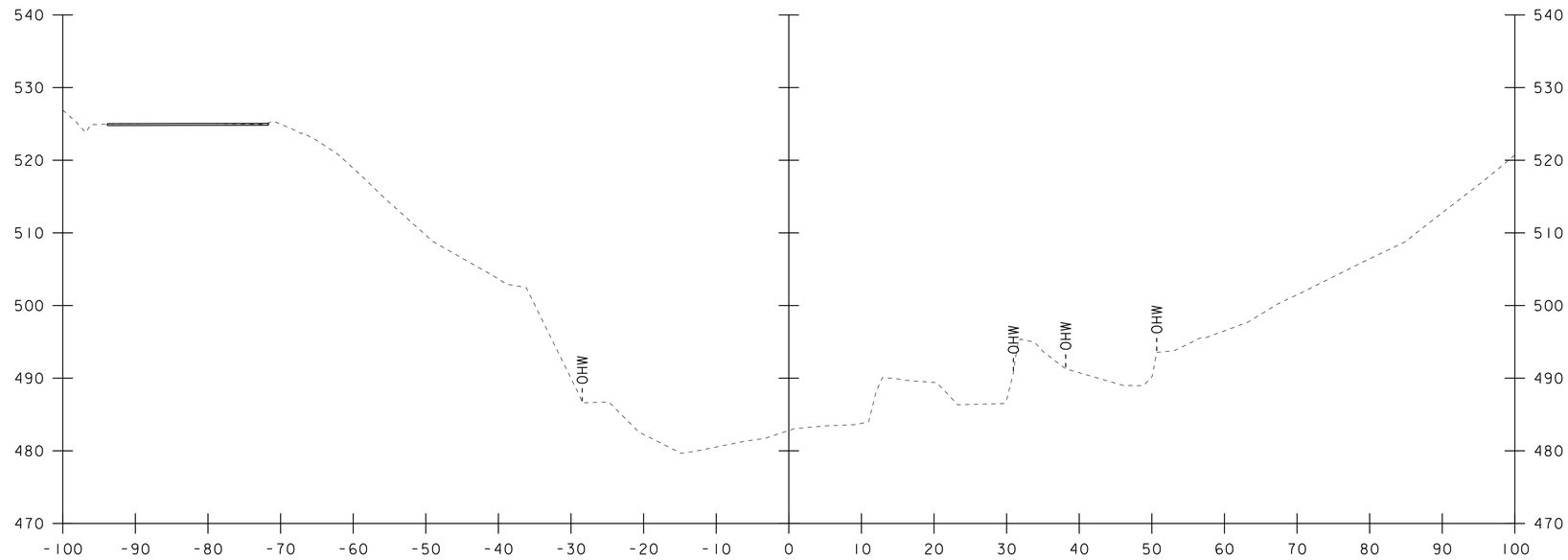

31+60

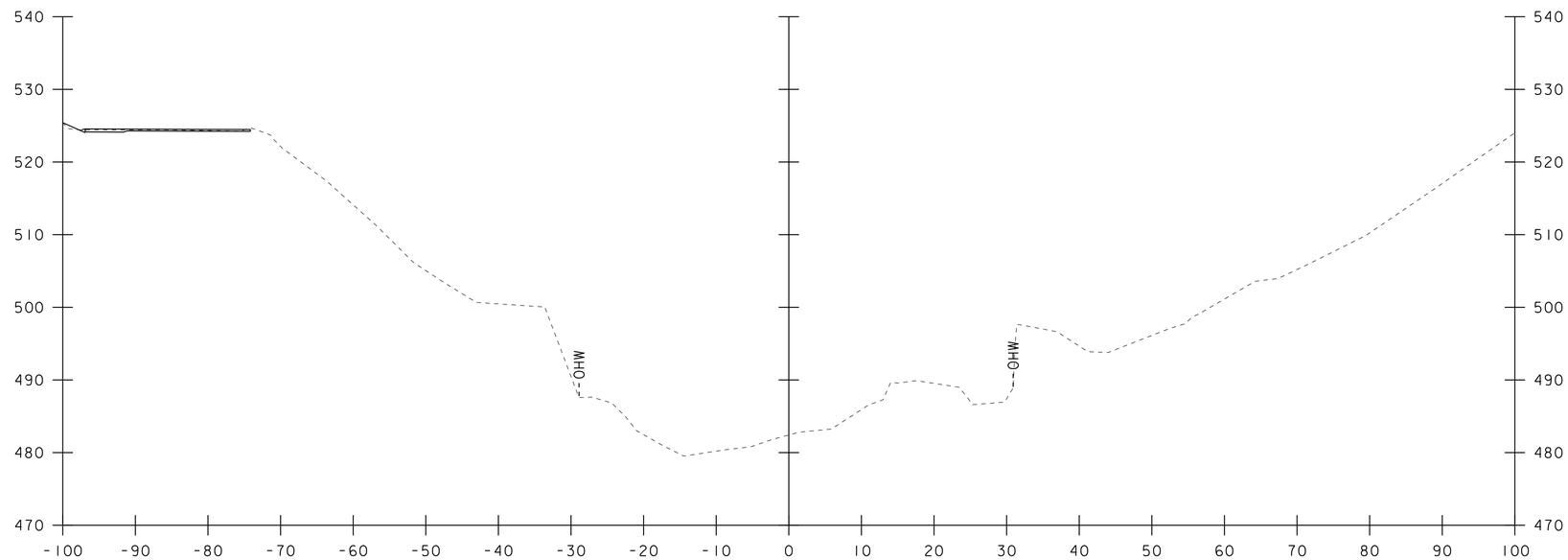

31+50

STA. 31+50 TO STA. 31+60

PROJECT NAME: NEWFANE	
PROJECT NUMBER: BF 0106(6)	
FILE NAME: sl3j306xs.dgn	PLOT DATE: 08-SEP-2020
PROJECT LEADER: C. COTA	DRAWN BY: M. LONGSTREET
DESIGNED BY: C. BURRALL	CHECKED BY: C. BURRALL
CHANNEL CROSS SECTIONS 7	SHEET 52 OF 64

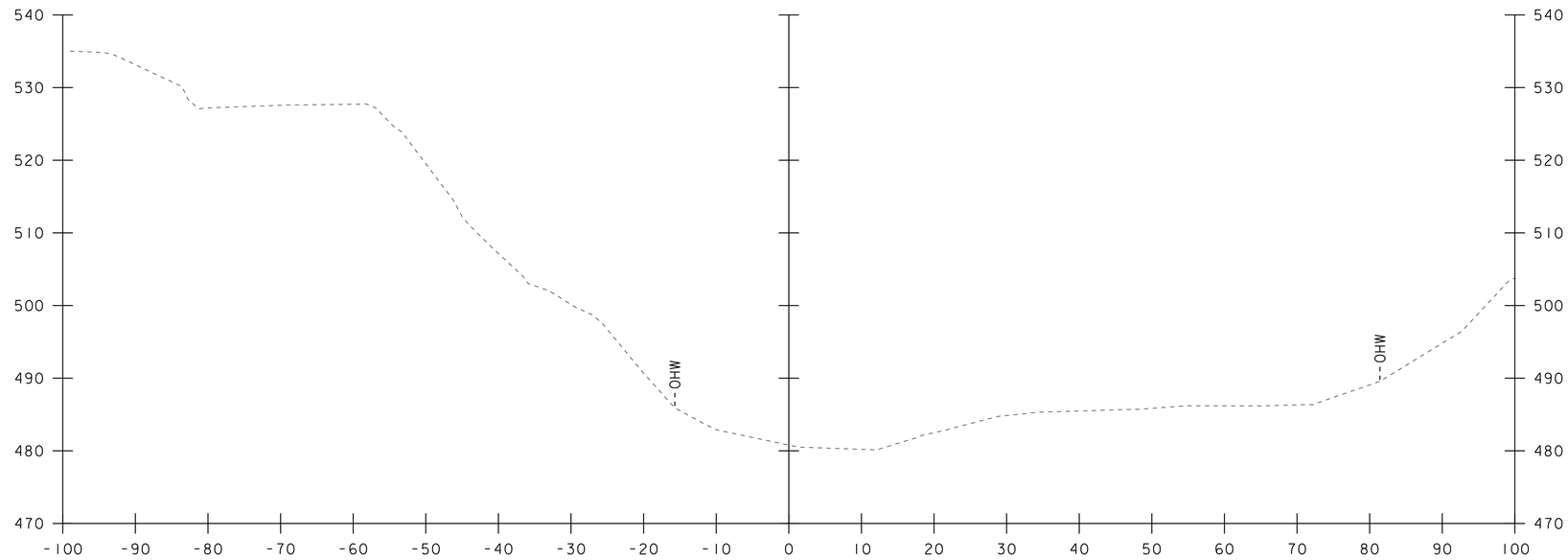

32+00

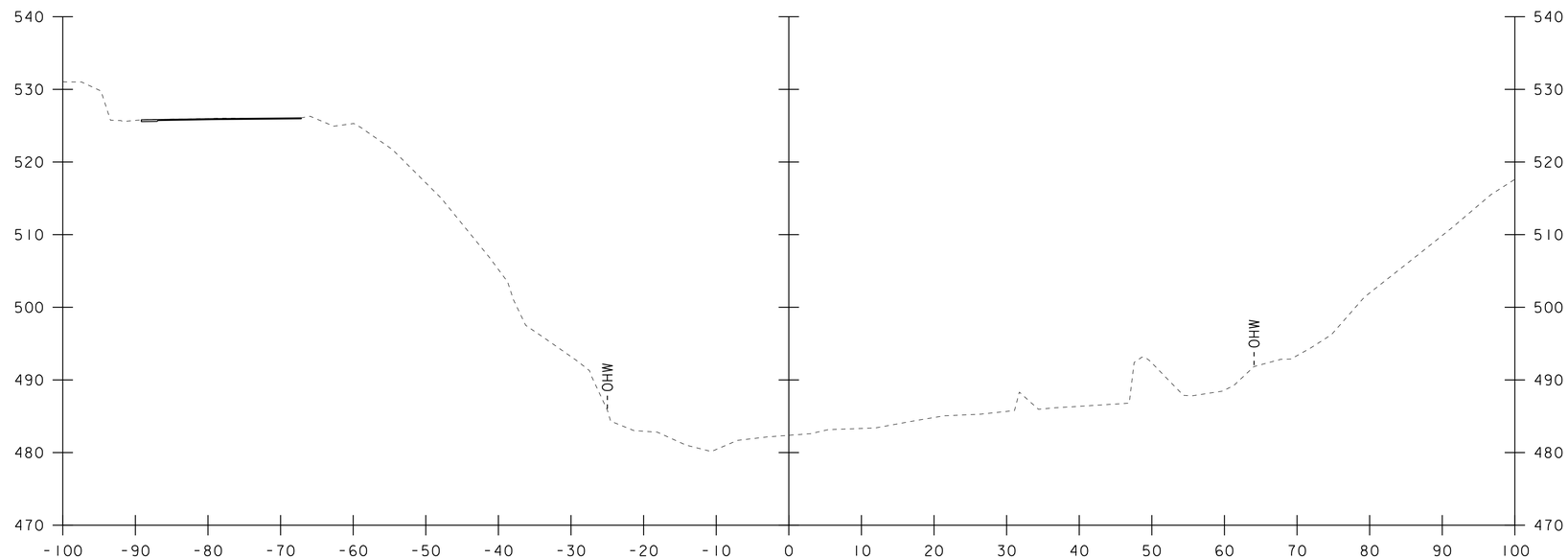

31+75

STA. 31+75 TO STA. 32+00

PROJECT NAME: NEWFANE	
PROJECT NUMBER: BF 0106(6)	
FILE NAME: sl3j306xs.dgn	PLOT DATE: 08-SEP-2020
PROJECT LEADER: C. COTA	DRAWN BY: M. LONGSTREET
DESIGNED BY: C. BURRALL	CHECKED BY: C. BURRALL
CHANNEL CROSS SECTIONS 8	SHEET 53 OF 64

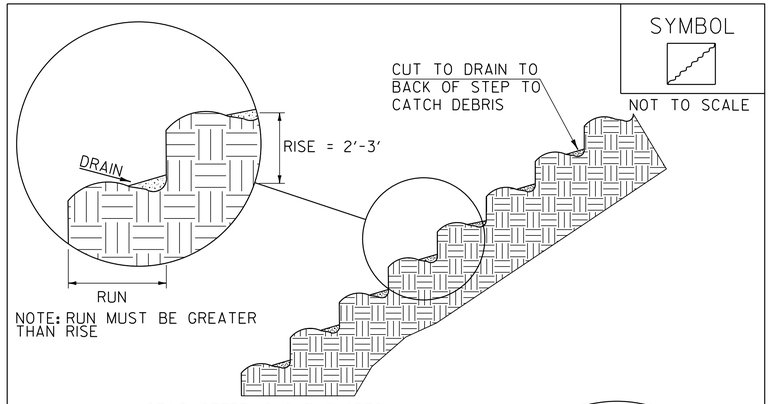

NOTE: RUN MUST BE GREATER THAN RISE

STAIR STEPPING CUT SLOPES

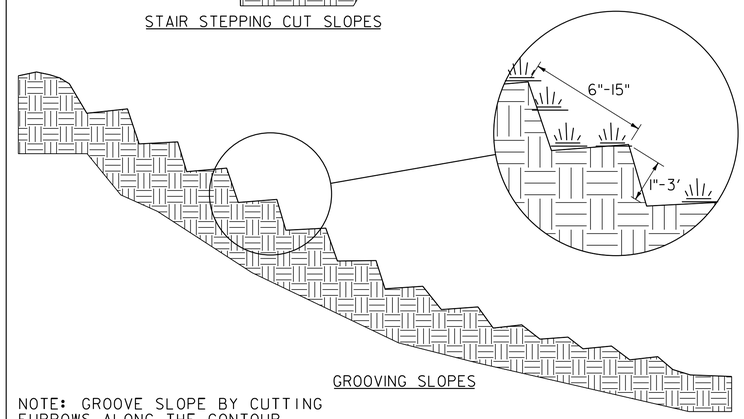

GROOVING SLOPES

NOTE: GROOVE SLOPE BY CUTTING FURROWS ALONG THE CONTOUR. IRREGULARITIES IN THE SOIL SURFACE CATCH RAINWATER AND RETAIN LIME, FERTILIZER AND SEED.

ADAPTED FROM DETAILS PROVIDED BY: NEW YORK STATE DEC
ORIGINALLY DEVELOPED BY USDA-NRCS
VERMONT DEPARTMENT OF ENVIRONMENTAL CONSERVATION

SURFACE ROUGHENING

NOTES:
REFER TO "THE VERMONT STANDARDS & SPECIFICATIONS FOR EROSION PREVENTION & SEDIMENT CONTROL -2006- "FROM THE VT AGENCY OF NATURAL RESOURCES FOR ADDITIONAL GUIDANCE.

THIS WORK SHALL BE CONSIDERED INCIDENTAL TO THE CONTRACT

REVISIONS	
APRIL 1, 2008	WHF
JANUARY 13, 2009	WHF

VAOT LOW GROW/FINE FESCUE MIX

	LBS/AC					
WEIGHT	BROADCAST	HYDROSEED	NAME	LATIN NAME	GERM	PURITY
38%	57	95	CREEPING RED FESCUE	FESTUCA RUBRA VAR. RUBRA	90%	98%
29%	43.5	72.5	HARD FESCUE	FESTUCA LONGIFOLIA	85%	95%
15%	22.5	37.5	CHEWINGS FESCUE	FESTUCA RUBRA VAR. COMMUTATA	87%	95%
15%	22.5	37.5	ANNUAL RYEGRASS	LOLIUM MULTIFLORUM	90%	95%
3%	4.5	7.5	INERTS			
100%	150	250				

VAOT RURAL AREA MIX

	LBS/AC					
WEIGHT	BROADCAST	HYDROSEED	NAME	LATIN NAME	GERM	PURITY
37.5%	22.5	45	CREEPING RED FESCUE	FESTUCA RUBRA VAR. RUBRA	85%	98%
37.5%	22.5	45	TALL FESCUE	FESTUCA ARUNDINACEA	90%	95%
5.0%	3	6	RED TOP	AGROSTIS GIGANTEA	90%	95%
15.0%	9	18	WHITE FIELD CLOVER	TRIFOLIUM REPENS	85%	98%
5.0%	3	6	ANNUAL RYE GRASS	LOLIUM MULTIFLORUM	85%	95%
100%	60	120				

GENERAL AMENDMENT GUIDANCE

FERTILIZER	LIME	
10/20/10	AG LIME	PELLITIZED
500 LBS/AC	2 TONS/AC	1 TONS/AC

CONSTRUCTION GUIDANCE

1. SEED MIX: THE CONTRACTOR SHALL COORDINATE WITH THE RESIDENT ENGINEER ON WHICH SEED MIX TO USE.
2. SEED MIX: USE AS INDICATED IN THE PLANS AND/OR FOR ALL ESTABLISHED UPLAND (NON WETLAND) AREAS DISTURBED BY THE CONTRACTOR.
3. ALL SEED MIXTURES: SHALL NOT HAVE A WEED CONTENT EXCEEDING 0.40% BY WEIGHT AND SHALL BE FREE OF ALL NOXIOUS SEED.
4. FERTILIZER AND LIMESTONE: SHALL FOLLOW RATES SHOWN ON PLAN OR AS DIRECTED BY THE ENGINEER.
5. HAY MULCH: TO BE PLACED ON EARTH SLOPES AT THE RATE OF 2 TONS/ACRE, ACHIEVE 90% GROUND COVER OR AS DIRECTED BY THE ENGINEER.
6. HYDROSEEDING: ALTHOUGH GUIDANCE IS GIVEN ABOVE THE SITE CONDITIONS AND THE TYPE OF HYDROSEED PROPOSED FOR USE WILL ULTIMATELY DICTATE THE AMOUNTS AND TYPES OF SOIL AMENDMENTS TO BE APPLIED.
7. TURF ESTABLISHMENT: PLACING SEED, FERTILIZER, LIME AND MULCH PRIOR TO SEPTEMBER 15 AND AFTER APRIL 15 CAN BETTER ENSURE A VIGOROUS GROWTH OF GRASS.

ADAPTED FROM VTRANS TECHNICAL LANDSCAPE MANUAL FOR ROADWAYS AND TRANSPORTATION FACILITIES

TURF ESTABLISHMENT

THIS WORK SHALL BE PERFORMED IN ACCORDANCE WITH SECTION 651 FOR SEED (PAY ITEM 651.15)

REVISIONS	
JANUARY 12, 2015	WHF

PROJECT NAME: NEWFANE
PROJECT NUMBER: BF 0106(6)

FILE NAME: s13j306eroDetails.dgn
PROJECT LEADER: C. COTA
DESIGNED BY: C. BURRALL
EPSC DETAILS

PLOT DATE: 08-SEP-2020
DRAWN BY: M. LONGSTREET
CHECKED BY: C. BURRALL
SHEET 54 OF 64